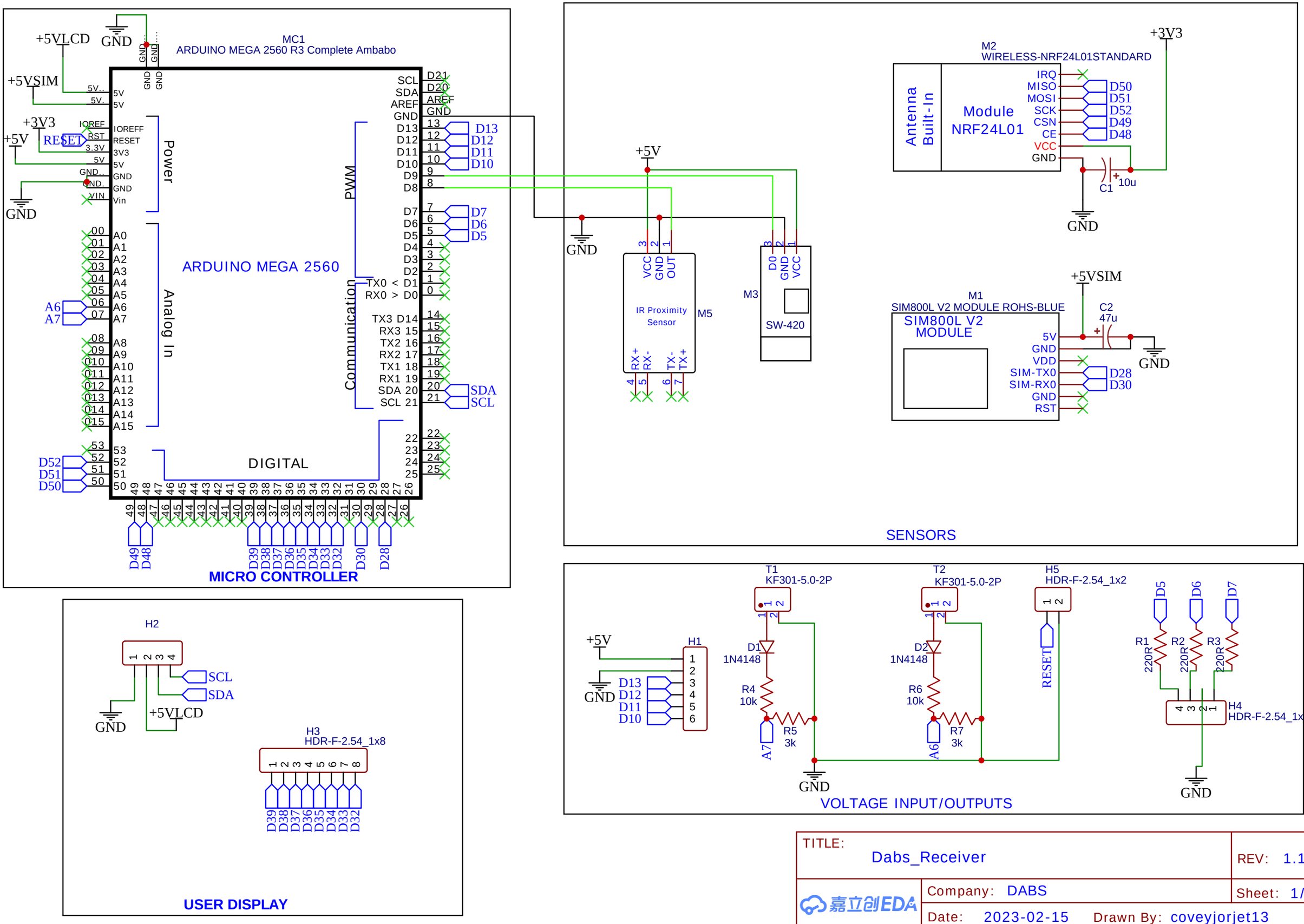

TITLE: Dabs_Receiver

REV: 1.1

Company: DABS

Sheet: 1/1

Date: 2023-02-15

Drawn By: coveyjorjet13