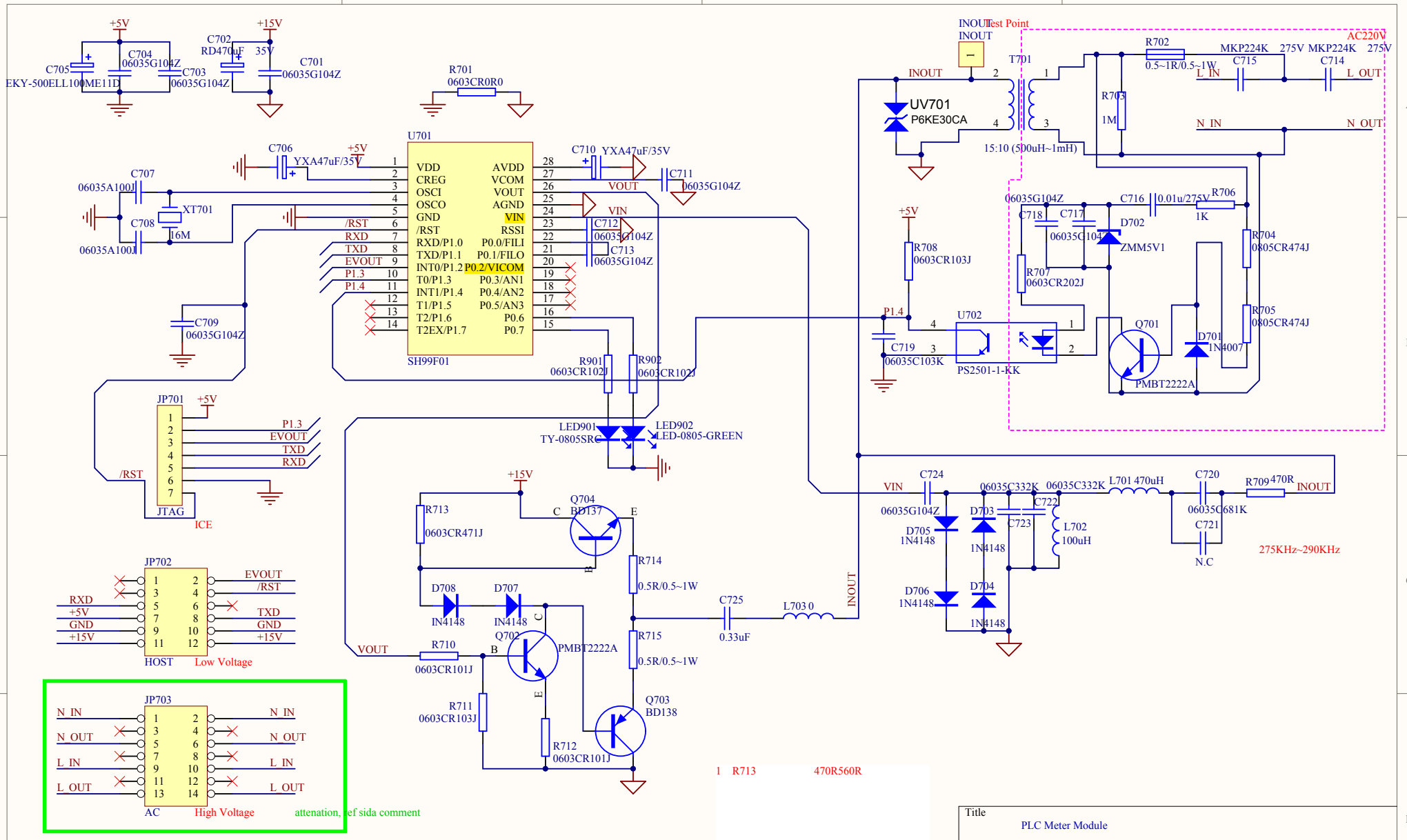

Title		
PLC Meter Module		
Size A4	Number	Revision V1.0
Date: 2014-8-18		Sheet of
File: E:\pangi\...\BUZT13-MY01-E-201-A1ZY-20140103.schdoc		Drawn By: