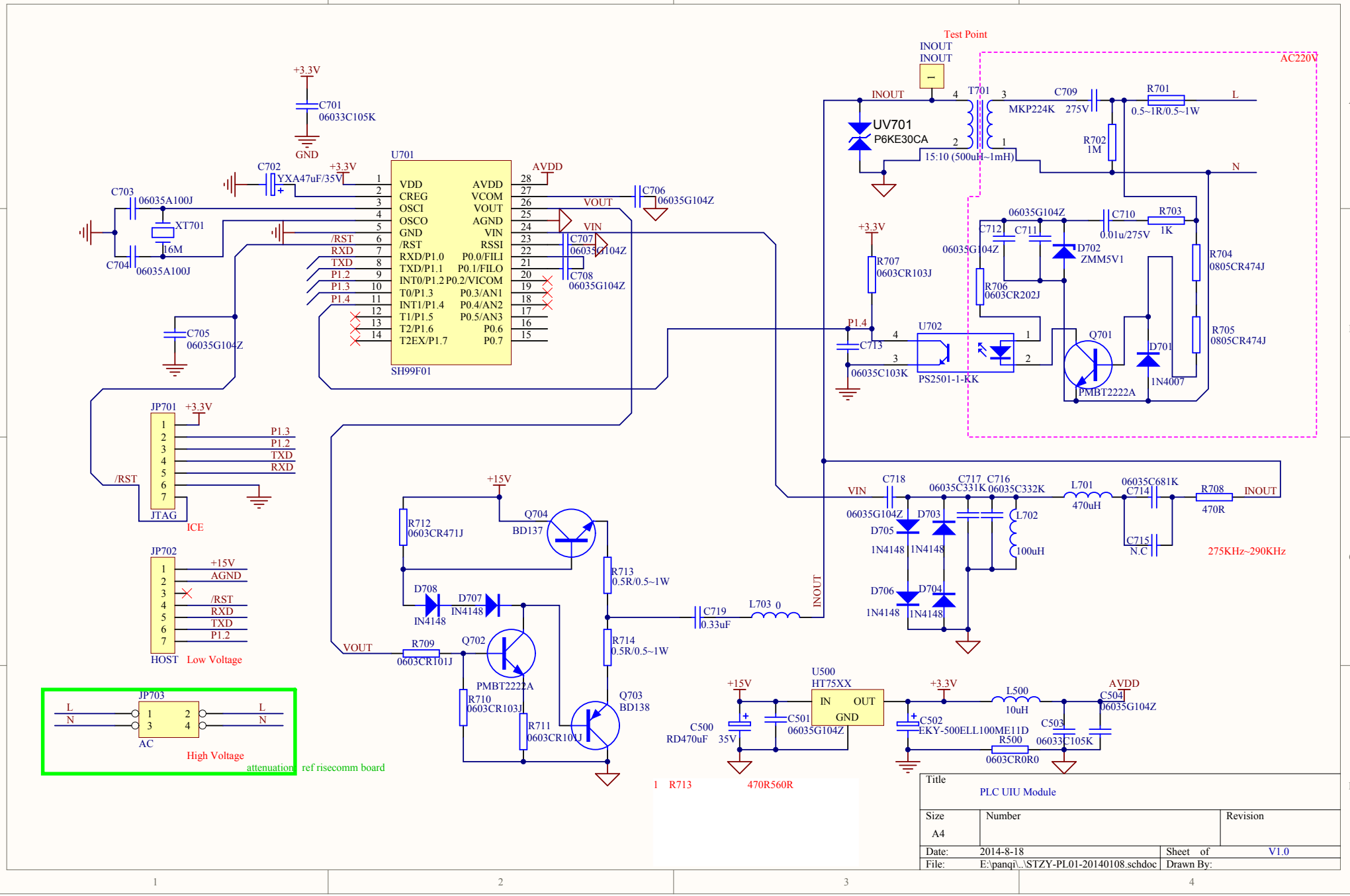
Test Point
INOUT
INOUT
AC220V
+3.3V
C701
06033C105K
GND
U701
VDD
CREG
OSCI
OSCO
GND
/RST
RXD/P1.0
TXD/P1.1
INT0/P1.2
T0/P1.3
INT1/P1.4
T1/P1.5
T2/P1.6
T2EX/P1.7
AVDD
VCOM
VOUT
AGND
VIN
RSSI
P0.0/FILI
P0.1/FILO
P0.2/VICOM
P0.3/AN1
P0.4/AN2
P0.5/AN3
P0.6
P0.7
SH99F01
C702
YXA47uF/35V
C703
06035A100J
XT701
16M
C704
06035A100J
C705
06035G104Z
C706
06035G104Z
C707
06035G104Z
C708
06035G104Z
/RST
RXD
TXD
P1.2
P1.3
P1.4
VOUT
VIN
JP701
JTAG
ICE
P1.3
P1.2
TXD
RXD
JP702
HOST
Low Voltage
+15V
AGND
/RST
RXD
TXD
P1.2
JP703
AC
High Voltage
L
N
attenuation
ref risecomm board
R712
0603CR471J
Q704
BD137
R713
0.5R/0.5~1W
R714
0.5R/0.5~1W
D708
IN4148
D707
IN4148
R709
0603CR101J
Q702
PMBT2222A
R710
0603CR103J
R711
0603CR101J
Q703
BD138
C719
0.33uF
L703 0
INOUT
UV701
P6KE30CA
T701
MKP224K
15:10 (500uH~1mH)
C709
275V
R701
0.5~1R/0.5~1W
R702
1M
L
N
R707
0603CR103J
P1.4
C713
06035C103K
U702
PS2501-1-KK
C712
06035G104Z
C711
06035G104Z
C710
0.01u/275V
R703
1K
D702
ZMM5V1
R706
0603CR202J
R704
0805CR474J
R705
0805CR474J
Q701
PMBT2222A
D701
1N4007
C718
06035G104Z
C717
06035C331K
C716
06035C332K
L701
470uH
06035C681K
C714
R708
470R
INOUT
D705
1N4148
D703
1N4148
L702
100uH
C715
N.C
275KHz~290KHz
D706
1N4148
D704
1N4148
U500
HT75XX
IN
OUT
GND
C500
RD470uF
35V
C501
06035G104Z
C502
EKY-500ELL100ME11D
L500
10uH
C504
06035G104Z
C503
06033C105K
R500
0603CR0R0
AVDD
1 R713 470R560R
Title
PLC UIU Module
Size
A4
Number
Revision
Date: 2014-8-18
Sheet of
V1.0
File: E:\pangi\...\STZY-PL01-20140108.schdoc
Drawn By: