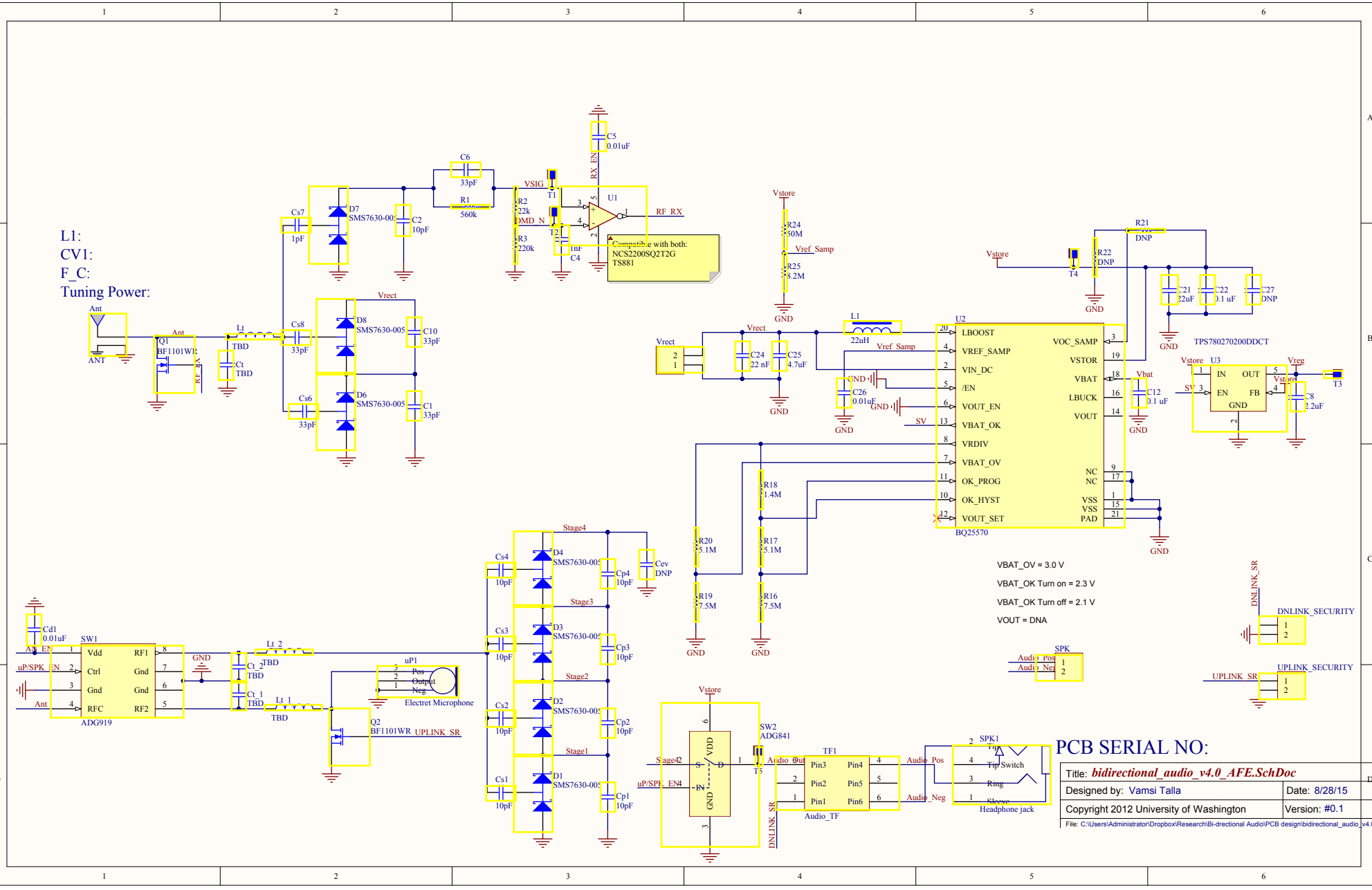
L1:
CV1:
F_C:
Tuning Power:
Ant
ANT
Q1
BF1101WR
Lt
TBD
Ct
TBD
Cs7
1pF
Cs8
33pF
Cs6
33pF
D7
SMS7630-005
D8
SMS7630-005
D6
SMS7630-005
C2
10pF
C10
33pF
C1
33pF
Vrect
C6
33pF
R1
560k
VSIG
R2
22k
DMD_N
R3
220k
T1
T2
1nF
C4
C5
0.01uF
RX_EN
U1
RF_RX
Compatible with both:
NCS2200SQ2T2G
TS881
Vstore
R24
50M
Vref_Samp
R25
8.2M
GND
L1
22uH
C24
22 nF
C25
4.7uF
C26
0.01uF
SV
U2
LBOOST
VREF_SAMP
VIN_DC
/EN
VOUT_EN
VBAT_OK
VRDIV
VBAT_OV
OK_PROG
OK_HYST
VOUT_SET
VOC_SAMP
VSTOR
VBAT
LBUCK
VOUT
NC
VSS
PAD
BQ25570
R21
DNP
R22
DNP
T4
C21
22uF
C22
0.1 uF
C27
DNP
TPS780270200DDCT
U3
IN
OUT
EN
FB
Vreg
T3
C8
2.2uF
Vbat
C12
0.1 uF
R18
1.4M
R17
5.1M
R16
7.5M
R20
5.1M
R19
7.5M
VBAT_OV = 3.0 V
VBAT_OK Turn on = 2.3 V
VBAT_OK Turn off = 2.1 V
VOUT = DNA
SPK
DNLINK_SR
DNLINK_SECURITY
UPLINK_SR
UPLINK_SECURITY
Cd1
0.01uF
SW1
Vdd
Ctrl
Gnd
RFC
RF1
RF2
ADG919
uP/SPK_EN
Lt_2
Ct_2
Ct_1
Lt_1
uP1
Pos
Output
Neg
Electret Microphone
Q2
BF1101WR
UPLINK_SR
Stage4
Stage3
Stage2
Stage1
D4
SMS7630-005
D3
SMS7630-005
D2
SMS7630-005
D1
SMS7630-005
Cs4
Cs3
Cs2
Cs1
10pF
Cp4
Cp3
Cp2
Cp1
Cev
DNP
SW2
ADG841
VDD
GND
Audio_Out
TF1
Pin3
Pin4
Pin2
Pin5
Pin1
Pin6
Audio_TF
Audio_Pos
Audio_Neg
SPK1
Tip
Tip Switch
Ring
Sleeve
Headphone jack
PCB SERIAL NO:
Title: bidirectional_audio_v4.0_AFE.SchDoc
Designed by: Vamsi Talla
Date: 8/28/15
Copyright 2012 University of Washington
Version: #0.1
File: C:\Users\Administrator\Dropbox\Research\Bi-directional Audio\PCB design\bidirectional_audio_v4.0\bidirec

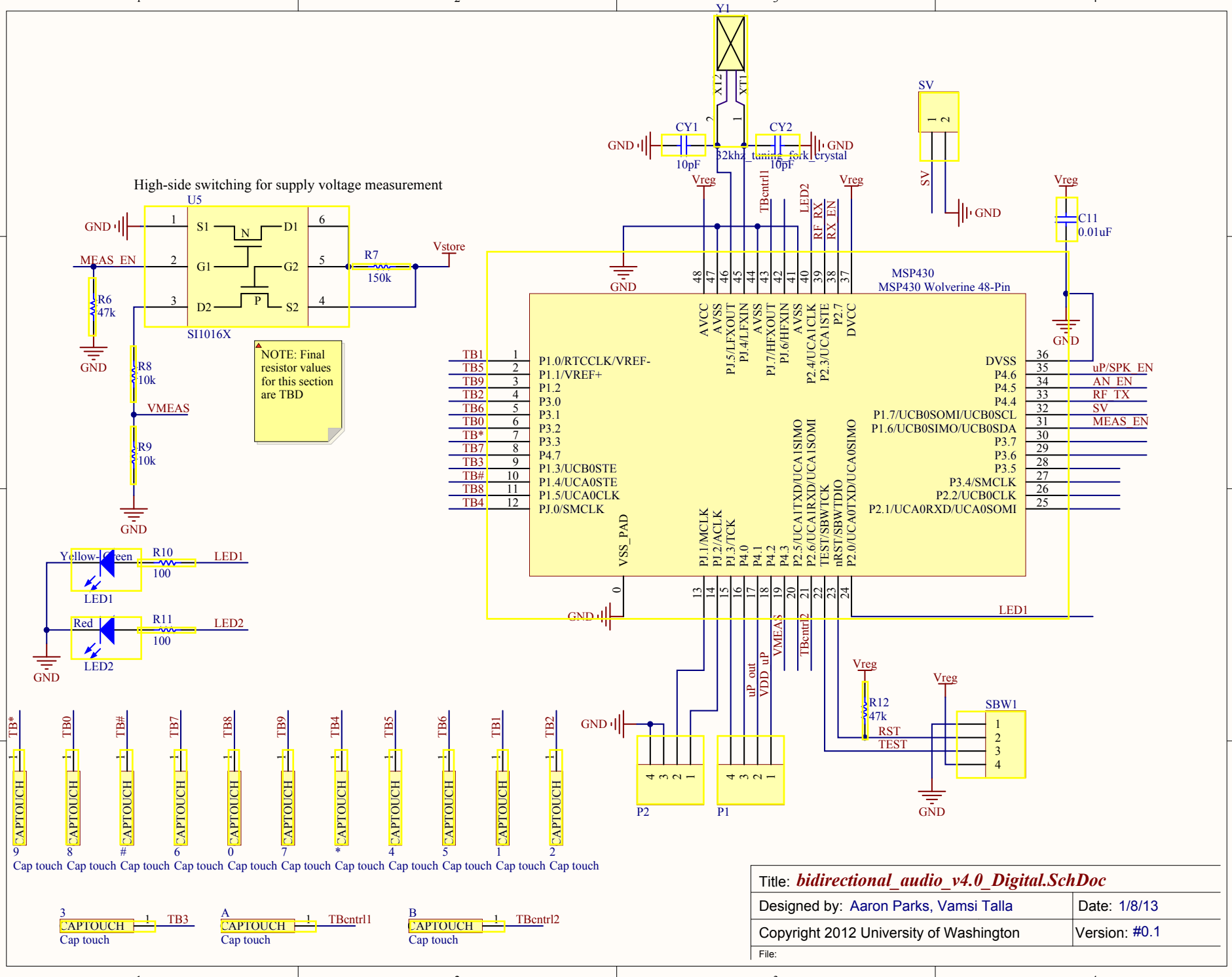
High-side switching for supply voltage measurement
U5
SI1016X
S1
G1
D2
D1
G2
S2
N
P
MEAS_EN
R6
47k
R7
150k
Vstore
R8
10k
VMEAS
R9
10k
NOTE: Final resistor values for this section are TBD
Y1
32khz_tuning_fork_crystal
CY1
10pF
CY2
10pF
SV
C11
0.01uF
MSP430
MSP430 Wolverine 48-Pin
AVCC
AVSS
PJ.5/LFXOUT
PJ.4/LFXIN
PJ.7/HFXOUT
PJ.6/HFXIN
P2.4/UCA1CLK
P2.3/UCA1STE
P2.7
DVCC
P1.0/RTCCLK/VREF-
P1.1/VREF+
P1.2
P3.0
P3.1
P3.2
P3.3
P4.7
P1.3/UCB0STE
P1.4/UCA0STE
P1.5/UCA0CLK
PJ.0/SMCLK
VSS_PAD
PJ.1/MCLK
PJ.2/ACLK
PJ.3/TCK
P4.0
P4.1
P4.2
P4.3
P2.5/UCA1TXD/UCA1SIMO
P2.6/UCA1RXD/UCA1SOMI
TEST/SBWTCK
nRST/SBWTDIO
P2.0/UCA0TXD/UCA0SIMO
DVSS
P4.6
P4.5
P4.4
P1.7/UCB0SOMI/UCB0SCL
P1.6/UCB0SIMO/UCB0SDA
P3.7
P3.6
P3.5
P3.4/SMCLK
P2.2/UCB0CLK
P2.1/UCA0RXD/UCA0SOMI
uP/SPK_EN
AN_EN
RF_TX
SV
MEAS_EN
LED1
LED2
TB1
TB5
TB9
TB2
TB6
TB0
TB*
TB7
TB3
TB#
TB8
TB4
Yellow-Green
R10
100
Red
R11
100
R12
47k
RST
TEST
SBW1
P2
P1
uP_out
VDD_uP
VMEAS
TBcntrl1
TBcntrl2
Vreg
GND
CAPTOUCH
Cap touch
9
8
#
6
0
7
*
4
5
1
2
3
A
B
Title: bidirectional_audio_v4.0_Digital.SchDoc
Designed by: Aaron Parks, Vamsi Talla
Date: 1/8/13
Copyright 2012 University of Washington
Version: #0.1
File: