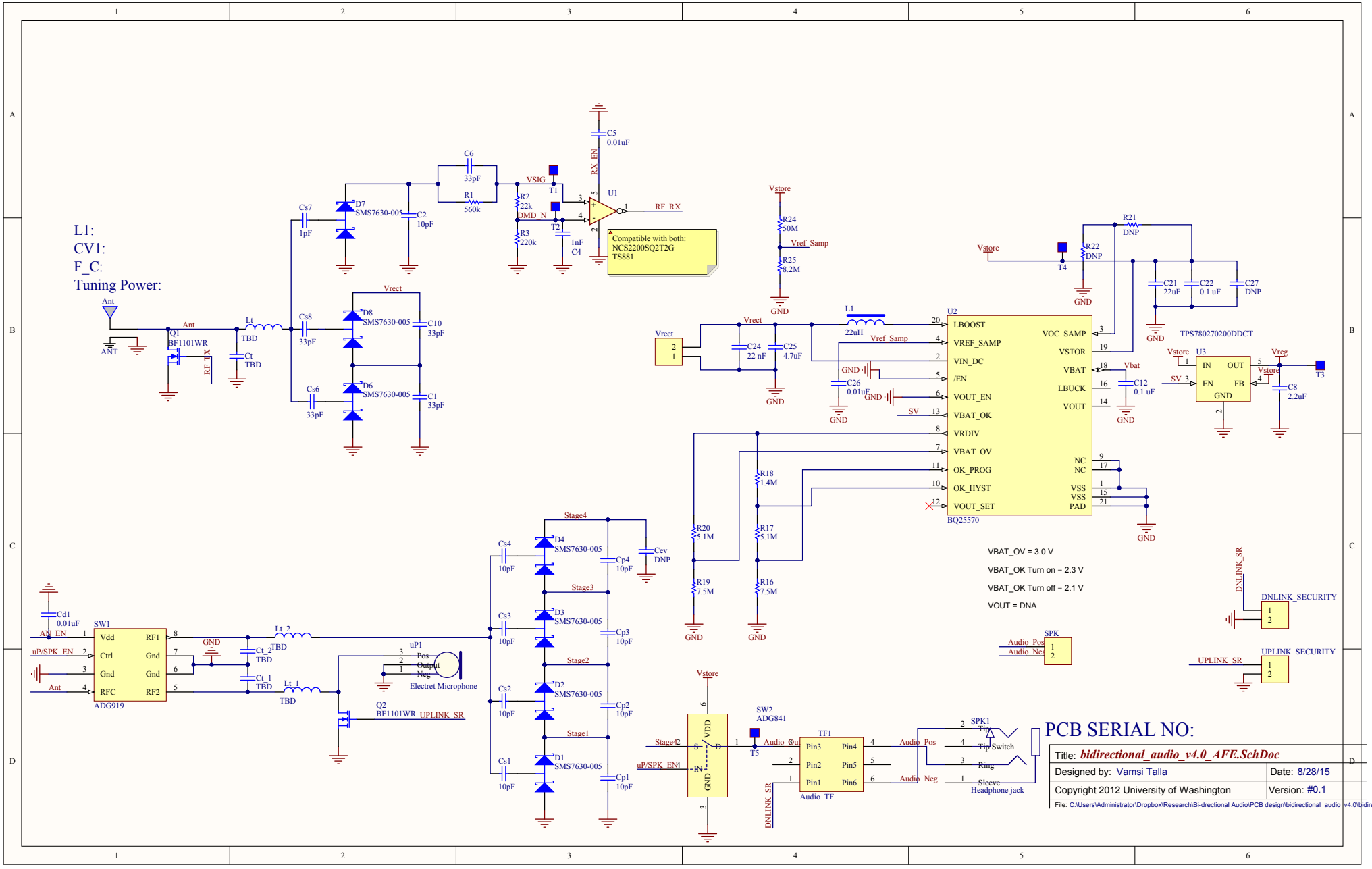
L1:
CV1:
F_C:
Tuning Power:
Compatible with both:
NCS2200SQ2T2G
TS881
U1
RX_EN
C5
0.01uF
C6
33pF
R1
560k
R2
22k
R3
220k
VSIG
DMD_N
T1
T2
1nF
C4
RF_RX
Cs7
1pF
D7
SMS7630-005
C2
10pF
Cs8
33pF
D8
SMS7630-005
C10
33pF
Cs6
33pF
D6
SMS7630-005
C1
33pF
Vrect
Ant
ANT
Q1
BF1101WR
RF_TX
Lt
TBD
Ct
TBD
Vstore
R24
50M
Vref_Samp
R25
8.2M
GND
Vrect
C24
22 nF
C25
4.7uF
L1
22uH
Vref_Samp
C26
0.01uF
SV
U2
LBOOST
VREF_SAMP
VIN_DC
/EN
VOUT_EN
VBAT_OK
VRDIV
VBAT_OV
OK_PROG
OK_HYST
VOUT_SET
VOC_SAMP
VSTOR
VBAT
LBUCK
VOUT
NC
NC
VSS
VSS
PAD
BQ25570
R21
DNP
R22
DNP
T4
C21
22uF
C22
0.1 uF
C27
DNP
TPS780270200DDCT
U3
IN
OUT
EN
FB
GND
Vbat
C12
0.1 uF
Vreg
T3
C8
2.2uF
R18
1.4M
R17
5.1M
R16
7.5M
R20
5.1M
R19
7.5M
VBAT_OV = 3.0 V
VBAT_OK Turn on = 2.3 V
VBAT_OK Turn off = 2.1 V
VOUT = DNA
SPK
Audio_Pos
Audio_Neg
DNLINK_SR
DNLINK_SECURITY
UPLINK_SR
UPLINK_SECURITY
Cd1
0.01uF
SW1
Vdd
Ctrl
Gnd
RFC
RF1
Gnd
Gnd
RF2
ADG919
AN_EN
uP/SPK_EN
Ct_2
TBD
Ct_1
TBD
Lt_2
TBD
Lt_1
TBD
uP1
Pos
Output
Neg
Electret Microphone
Q2
BF1101WR
UPLINK_SR
Stage4
Stage3
Stage2
Stage1
Cs4
10pF
Cs3
10pF
Cs2
10pF
Cs1
10pF
D4
SMS7630-005
D3
SMS7630-005
D2
SMS7630-005
D1
SMS7630-005
Cp4
10pF
Cp3
10pF
Cp2
10pF
Cp1
10pF
Cev
DNP
Vstore
SW2
ADG841
VDD
S
D
IN
GND
T5
Audio_Out
TF1
Pin3
Pin2
Pin1
Pin4
Pin5
Pin6
Audio_TF
Audio_Pos
Audio_Neg
SPK1
Tip
Tip Switch
Ring
Sleeve
Headphone jack
PCB SERIAL NO:
Title: bidirectional_audio_v4.0_AFE.SchDoc
Designed by: Vamsi Talla
Date: 8/28/15
Copyright 2012 University of Washington
Version: #0.1
File: C:\Users\Administrator\Dropbox\Research\Bi-drectional Audio\PCB design\bidirectional_audio_v4.0\bidirec

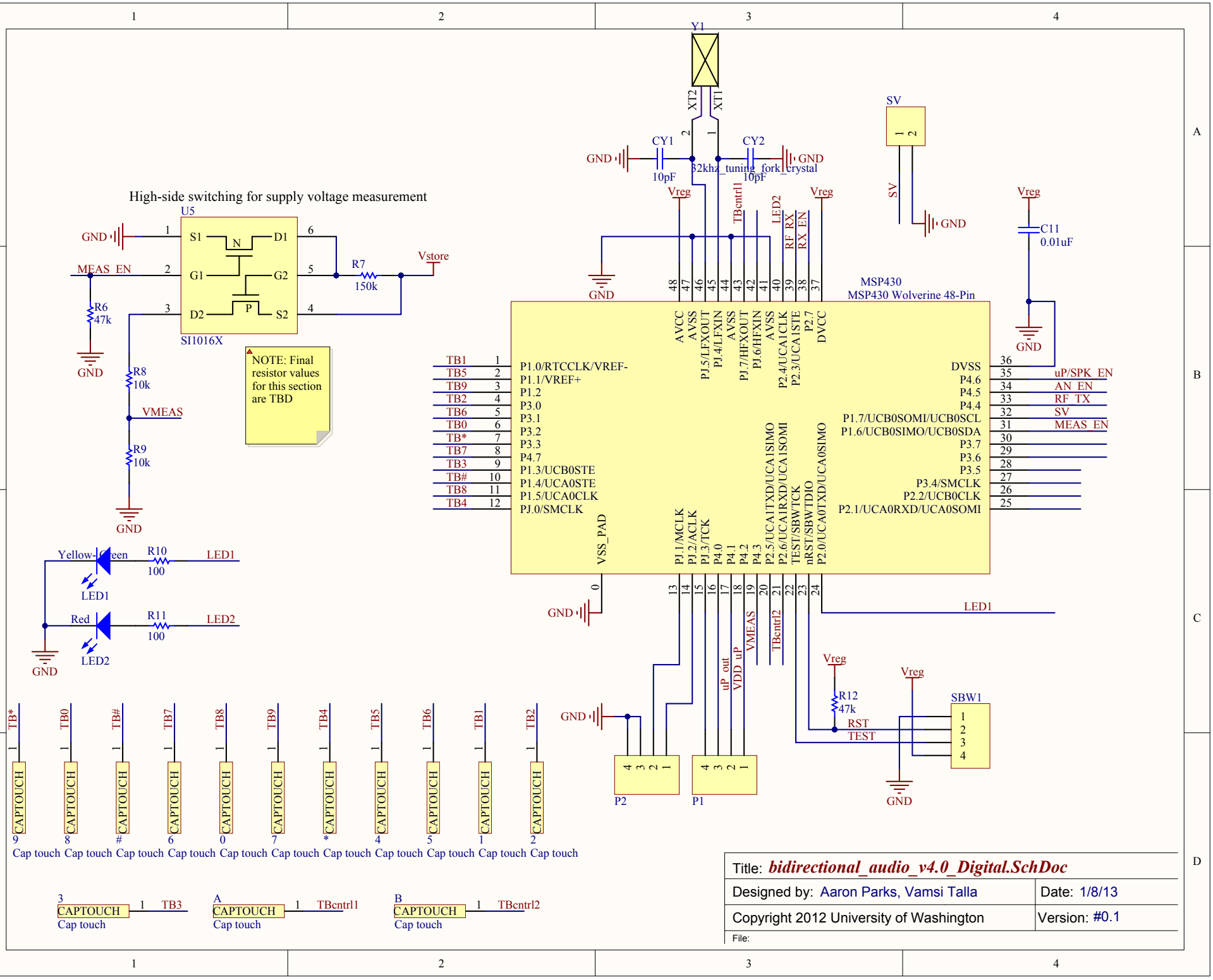

Title: *bidirectional_audio_v4.0_Digital.SchDoc*	
Designed by: Aaron Parks, Vamsi Talla	Date: 1/8/13
Copyright 2012 University of Washington	Version: #0.1
File:	