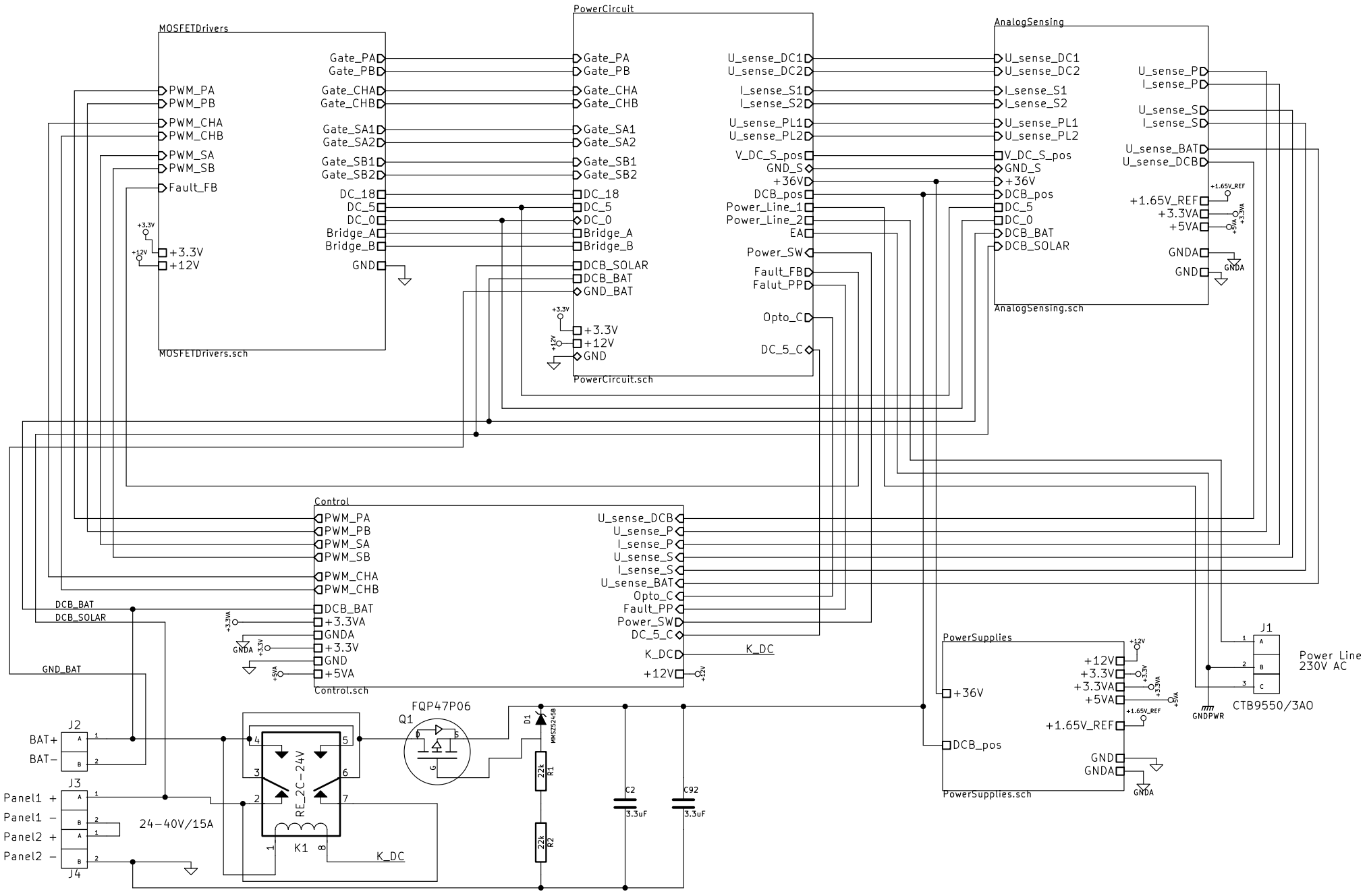
MOSFETDrivers
PWM_PA
PWM_PB
PWM_CHA
PWM_CHB
PWM_SA
PWM_SB
Fault_FB
+3.3V
+12V
Gate_PA
Gate_PB
Gate_CHA
Gate_CHB
Gate_SA1
Gate_SA2
Gate_SB1
Gate_SB2
DC_18
DC_5
DC_0
Bridge_A
Bridge_B
GND
MOSFETDrivers.sch
PowerCircuit
DCB_SOLAR
DCB_BAT
GND_BAT
U_sense_DC1
U_sense_DC2
I_sense_S1
I_sense_S2
U_sense_PL1
U_sense_PL2
V_DC_S_pos
GND_S
+36V
DCB_pos
Power_Line_1
Power_Line_2
EA
Power_SW
Fault_FB
Falut_PP
Opto_C
DC_5_C
PowerCircuit.sch
AnalogSensing
U_sense_P
I_sense_P
U_sense_S
I_sense_S
U_sense_BAT
U_sense_DCB
+1.65V_REF
+3.3VA
+5VA
GNDA
AnalogSensing.sch
Control
K_DC
Control.sch
J1
Power Line
230V AC
CTB9550/3AO
GNDPWR
PowerSupplies
PowerSupplies.sch
J2
BAT+
BAT−
J3
Panel1 +
Panel1 −
Panel2 +
Panel2 −
J4
24−40V/15A
RE_2C−24V
K1
FQP47P06
Q1
D1
MMSZ5245B
22k
R1
R2
C2
C92
3.3uF

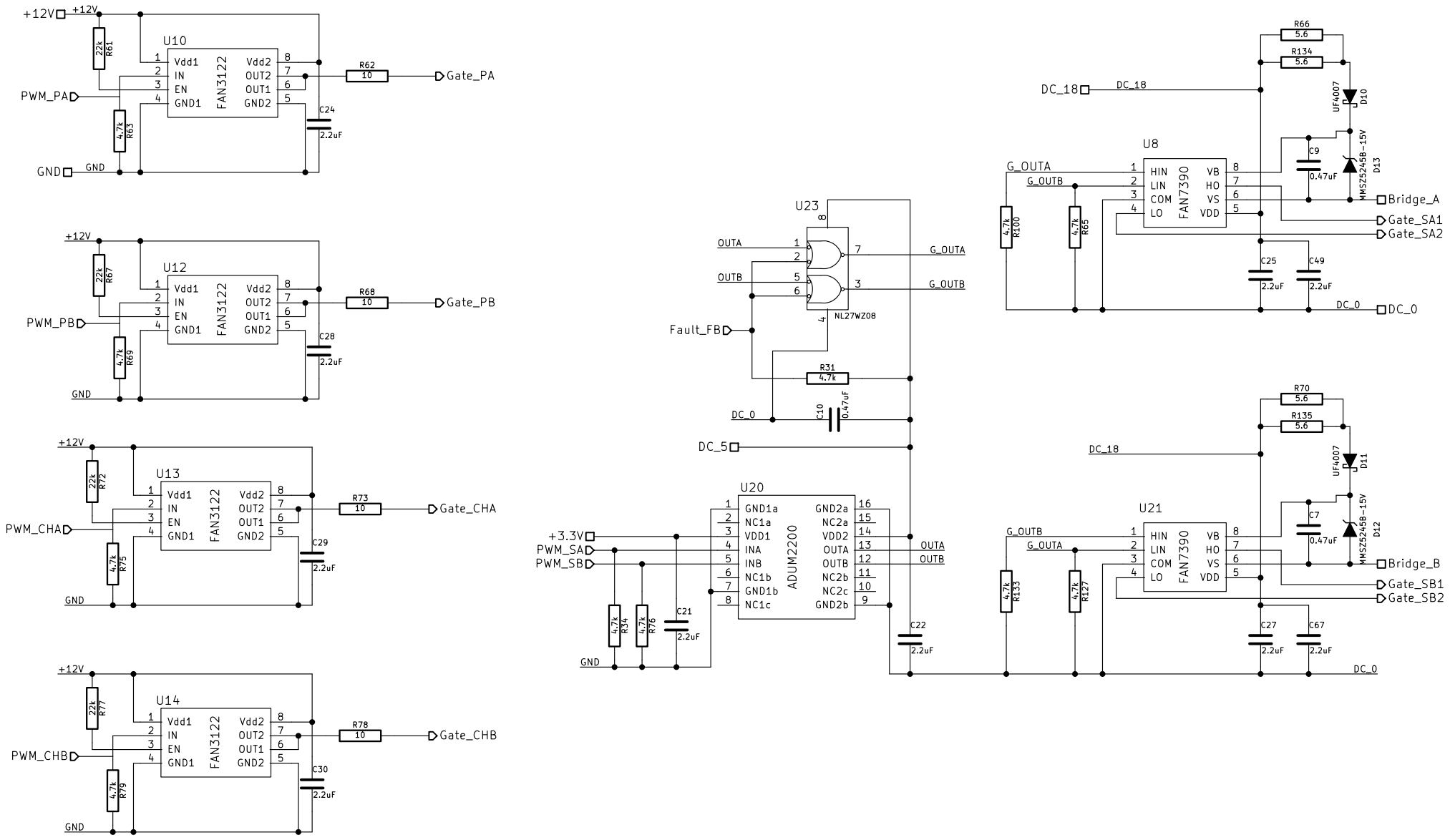
+12V
U10
FAN3122
Vdd1
IN
EN
GND1
Vdd2
OUT2
OUT1
GND2
R61 22k
R63 4.7k
PWM_PA
GND
R62 10
Gate_PA
C24 2.2uF
U12
R67 22k
R69 4.7k
PWM_PB
R68 10
Gate_PB
C28 2.2uF
U13
R72 22k
R75 4.7k
PWM_CHA
R73 10
Gate_CHA
C29 2.2uF
U14
R77 22k
R79 4.7k
PWM_CHB
R78 10
Gate_CHB
C30 2.2uF
U23
OUTA
OUTB
G_OUTA
G_OUTB
NL27WZ08
Fault_FB
R31 4.7k
DC_0
C10 0.47uF
DC_5
U20
ADUM2200
GND1a
NC1a
VDD1
INA
INB
NC1b
GND1b
NC1c
GND2a
NC2a
VDD2
OUTA
OUTB
NC2b
NC2c
GND2b
+3.3V
PWM_SA
PWM_SB
R34 4.7k
R76 4.7k
C21 2.2uF
C22 2.2uF
GND
DC_18
R66 5.6
R134 5.6
D10 UF4007
D13 MMSZ5245B-15V
C9 0.47uF
U8
FAN7390
HIN
LIN
COM
LO
VB
HO
VS
VDD
R100 4.7k
R65 4.7k
Bridge_A
Gate_SA1
Gate_SA2
C25 2.2uF
C49 2.2uF
R70 5.6
R135 5.6
D11 UF4007
D12 MMSZ5245B-15V
C7 0.47uF
U21
R133 4.7k
R127 4.7k
Bridge_B
Gate_SB1
Gate_SB2
C27 2.2uF
C67 2.2uF

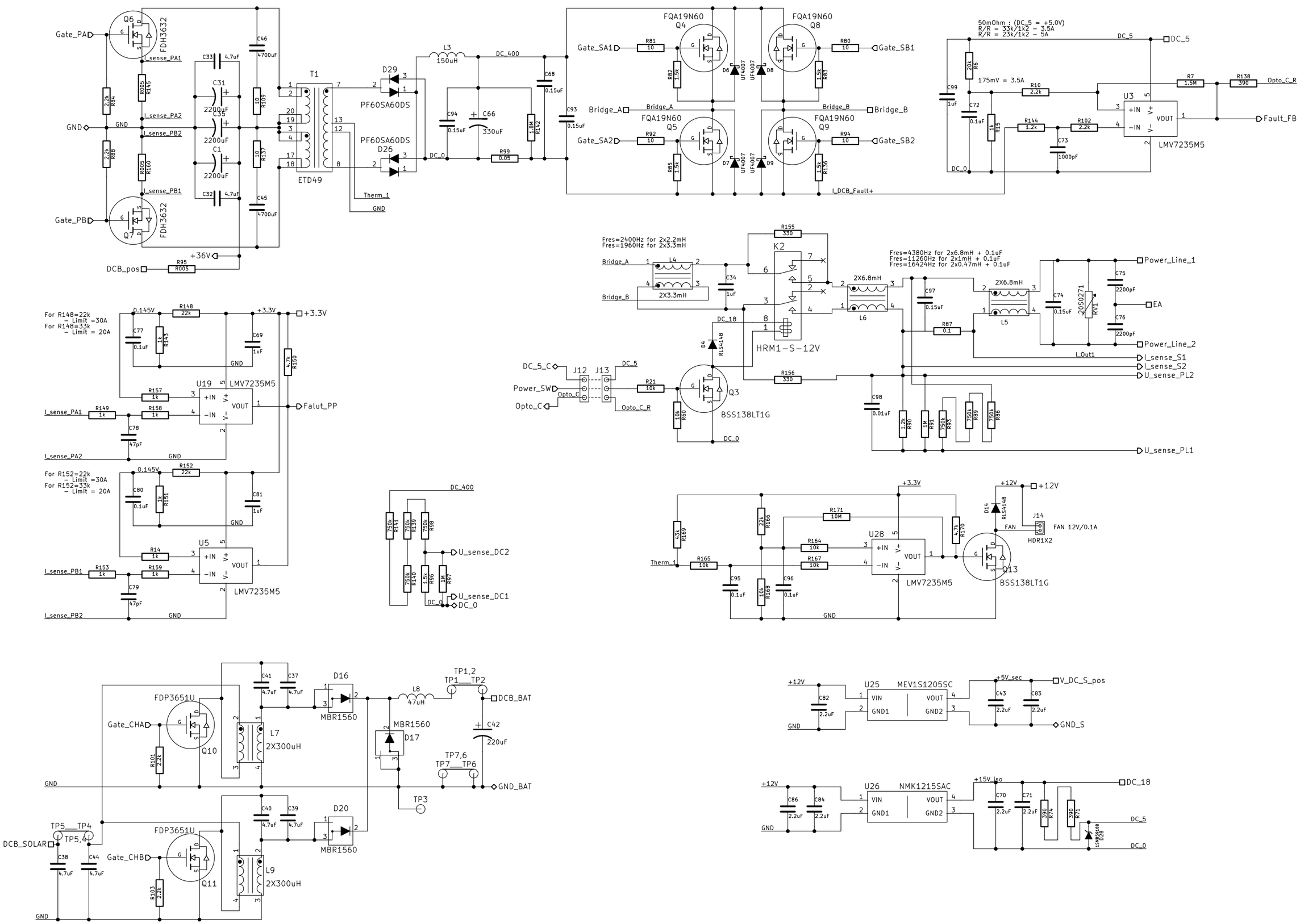
Gate_PA
Gate_PB
GND
DCB_pos
+36V
Q6
Q7
FDH3632
I_sense_PA1
I_sense_PA2
I_sense_PB2
I_sense_PB1
C33 4.7uF
C31 2200uF
C35 2200uF
C1 2200uF
C32 4.7uF
C46 4700uF
C45 4700uF
R109 10
R137 10
R95 R005
T1
ETD49
D29
D26
PF60SA60DS
Therm_1
L3 150uH
DC_400
DC_0
C94 0.15uF
C66 330uF
R99 0.05
C68 0.15uF
C93 0.15uF
R142 1.8M
Gate_SA1
Gate_SA2
Bridge_A
Bridge_B
Gate_SB1
Gate_SB2
R81 10
R92 10
R80 10
R94 10
FQA19N60
Q4
Q5
Q8
Q9
D6 UF4007
D7 UF4007
D8 UF4007
D9 UF4007
R82 1.5k
R85 1.5k
R83 1.5k
R136 1.5k
I_DCB_Fault+
50mOhm : (DC_5 = +5.0V)
R/R = 33k/1k2 - 3.5A
R/R = 23k/1k2 - 5A
DC_5
175mV = 3.5A
R6 20k
C99 1uF
C72 0.1uF
R15 1k
R10 2.2k
R144 1.2k
R102 2.2k
C73 1000pF
R7 1.5M
R138 390
Opto_C_R
Fault_FB
U3
LMV7235M5
For R148=22k
- Limit =30A
For R148=33k
- Limit = 20A
0.145V
R148 22k
+3.3V
C77 0.1uF
R145 1k
C69 1uF
R150 4.7k
U19
LMV7235M5
R157 1k
R158 1k
R149 1k
C78 47pF
Falut_PP
For R152=22k
- Limit =30A
For R152=33k
- Limit = 20A
R152 22k
C80 0.1uF
R151 1k
C81 1uF
U5
R14 1k
R159 1k
R153 1k
C79 47pF
Fres=2400Hz for 2x2.2mH
Fres=1960Hz for 2x3.3mH
L4
2X3.3mH
C34 1uF
R155 330
K2
HRM1-S-12V
DC_18
D4 RLS4148
R156 330
Fres=4380Hz for 2x6.8mH + 0.1uF
Fres=11260Hz for 2x1mH + 0.1uF
Fres=16424Hz for 2x0.47mH + 0.1uF
2X6.8mH
L6
L5
C97 0.15uF
R87 0.1
C74 0.15uF
20S0271
RV1
C75 2200pF
C76 2200pF
Power_Line_1
EA
Power_Line_2
I_Out1
I_sense_S1
I_sense_S2
U_sense_PL2
U_sense_PL1
DC_5_C
Power_SW
Opto_C
J12
J13
R21 10k
R60 10k
Q3
BSS138LT1G
C98 0.01uF
R90 1.2k
R91 1M
R93 750k
R89 750k
R86 750k
DC_400
R141 750k
R139 750k
R98 750k
R140 750k
R96 1.5k
R97 1M
U_sense_DC2
U_sense_DC1
DC_0
+3.3V
R169 43k
R166 22k
R171 10M
R164 10k
R167 10k
R165 10k
C95 0.1uF
R168 10k
C96 0.1uF
U28
LMV7235M5
R170 4.7k
+12V
D14 RLS4148
J14
FAN
FAN 12V/0.1A
HDR1X2
Q13
BSS138LT1G
FDP3651U
Q10
Q11
Gate_CHA
Gate_CHB
R101 2.2k
R103 2.2k
C41 4.7uF
C37 4.7uF
C40 4.7uF
C39 4.7uF
L7
L9
2X300uH
D16
D20
MBR1560
L8 47uH
TP1,2
TP1___TP2
DCB_BAT
C42 220uF
TP7,6
TP7___TP6
GND_BAT
TP3
TP5___TP4
TP5,4
DCB_SOLAR
C38 4.7uF
C44 4.7uF
U25
MEV1S1205SC
VIN
VOUT
GND1
GND2
C82 2.2uF
C43 2.2uF
C83 2.2uF
+5V_sec
V_DC_S_pos
GND_S
U26
NMK1215SAC
C86 2.2uF
C84 2.2uF
C70 2.2uF
C71 2.2uF
+15V_iso
R74 390
R71 390
1SMB9148
D28
DC_18
DC_5
DC_0

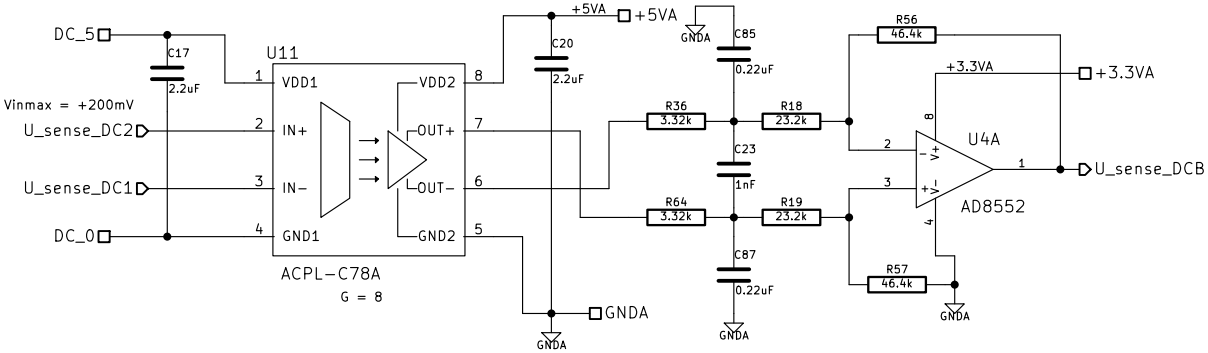
DC_5
C17
2.2uF
Vinmax = +200mV
U_sense_DC2
U_sense_DC1
DC_0
U11
VDD1
IN+
IN−
GND1
VDD2
OUT+
OUT−
GND2
ACPL−C78A
G = 8
+5VA
C20
2.2uF
GNDA
C85
0.22uF
R36
3.32k
R64
3.32k
C23
1nF
C87
0.22uF
R18
23.2k
R19
23.2k
R56
46.4k
R57
46.4k
+3.3VA
U4A
AD8552
U_sense_DCB

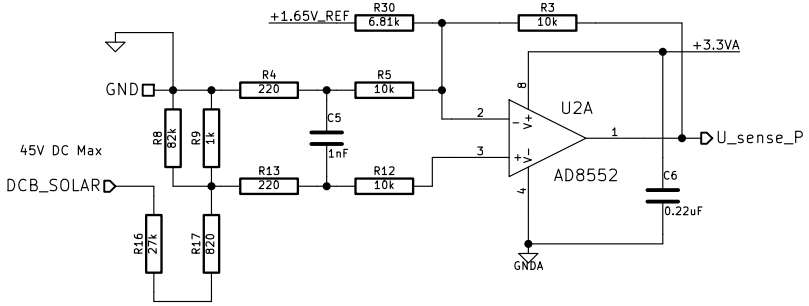
+1.65V_REF
R30
6.81k
R3
10k
+3.3VA
GND
R4
220
R5
10k
C5
1nF
R8
82k
R9
1k
45V DC Max
DCB_SOLAR
R13
220
R12
10k
R16
27k
R17
820
U2A
AD8552
U_sense_P
C6
0.22uF
GNDA

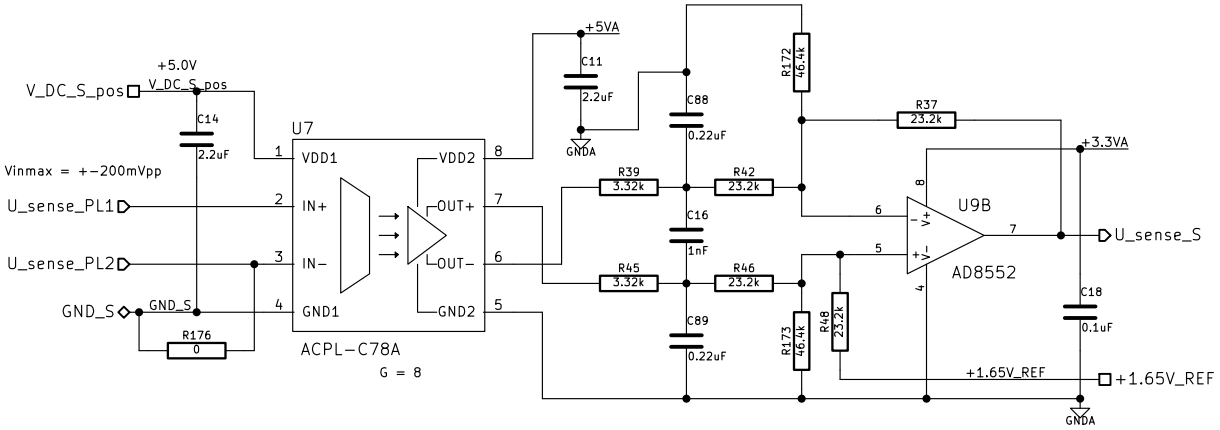
+5.0V
V_DC_S_pos
C14
2.2uF
Vinmax = +−200mVpp
U_sense_PL1
U_sense_PL2
GND_S
R176
0
U7
VDD1
IN+
IN−
GND1
VDD2
OUT+
OUT−
GND2
ACPL−C78A
G = 8
+5VA
C11
2.2uF
GNDA
C88
0.22uF
R172
46.4k
R39
3.32k
R42
23.2k
C16
1nF
R45
3.32k
R46
23.2k
C89
0.22uF
R173
46.4k
R48
23.2k
R37
23.2k
+3.3VA
U9B
AD8552
U_sense_S
C18
0.1uF
+1.65V_REF

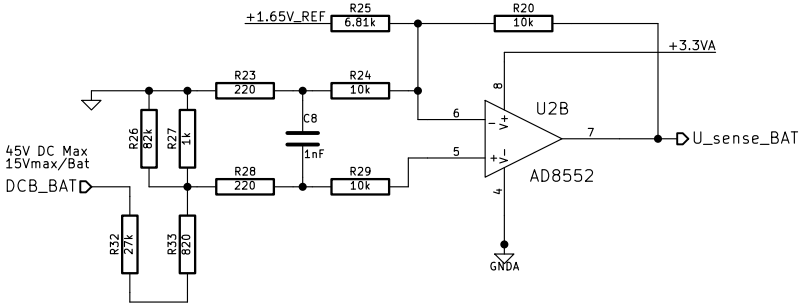
+1.65V_REF
R25
6.81k
R20
10k
+3.3VA
R23
220
R24
10k
C8
1nF
R26
82k
R27
1k
45V DC Max
15Vmax/Bat
DCB_BAT
R28
220
R29
10k
R32
27k
R33
820
U2B
AD8552
U_sense_BAT
GNDA

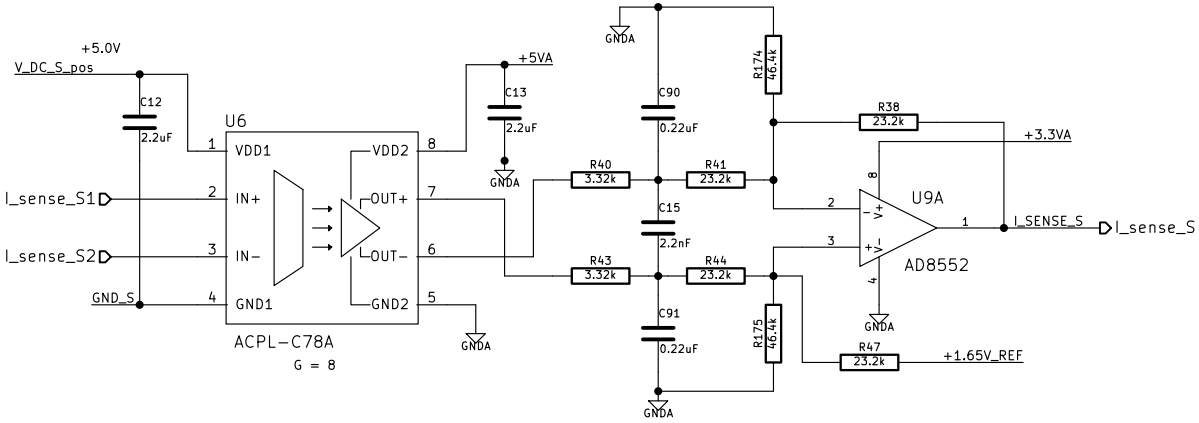
+5.0V
V_DC_S_pos
C12
2.2uF
I_sense_S1
I_sense_S2
GND_S
U6
VDD1
IN+
IN−
GND1
VDD2
OUT+
OUT−
GND2
ACPL−C78A
G = 8
+5VA
C13
2.2uF
GNDA
C90
0.22uF
R174
46.4k
R40
3.32k
R41
23.2k
C15
2.2nF
R43
3.32k
R44
23.2k
C91
0.22uF
R175
46.4k
R38
23.2k
+3.3VA
U9A
AD8552
I_SENSE_S
I_sense_S
R47
23.2k
+1.65V_REF

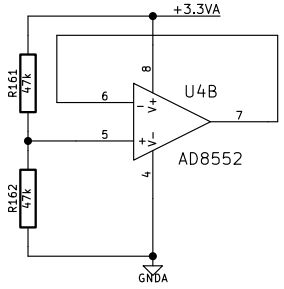
+3.3VA
R161
47k
R162
47k
U4B
AD8552
GNDA

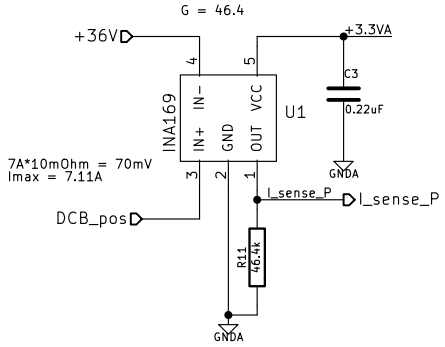
G = 46.4
+36V
+3.3VA
C3
0.22uF
INA169
IN+
IN−
GND
OUT
VCC
U1
7A*10mOhm = 70mV
Imax = 7.11A
DCB_pos
I_sense_P
R11
46.4k
GNDA

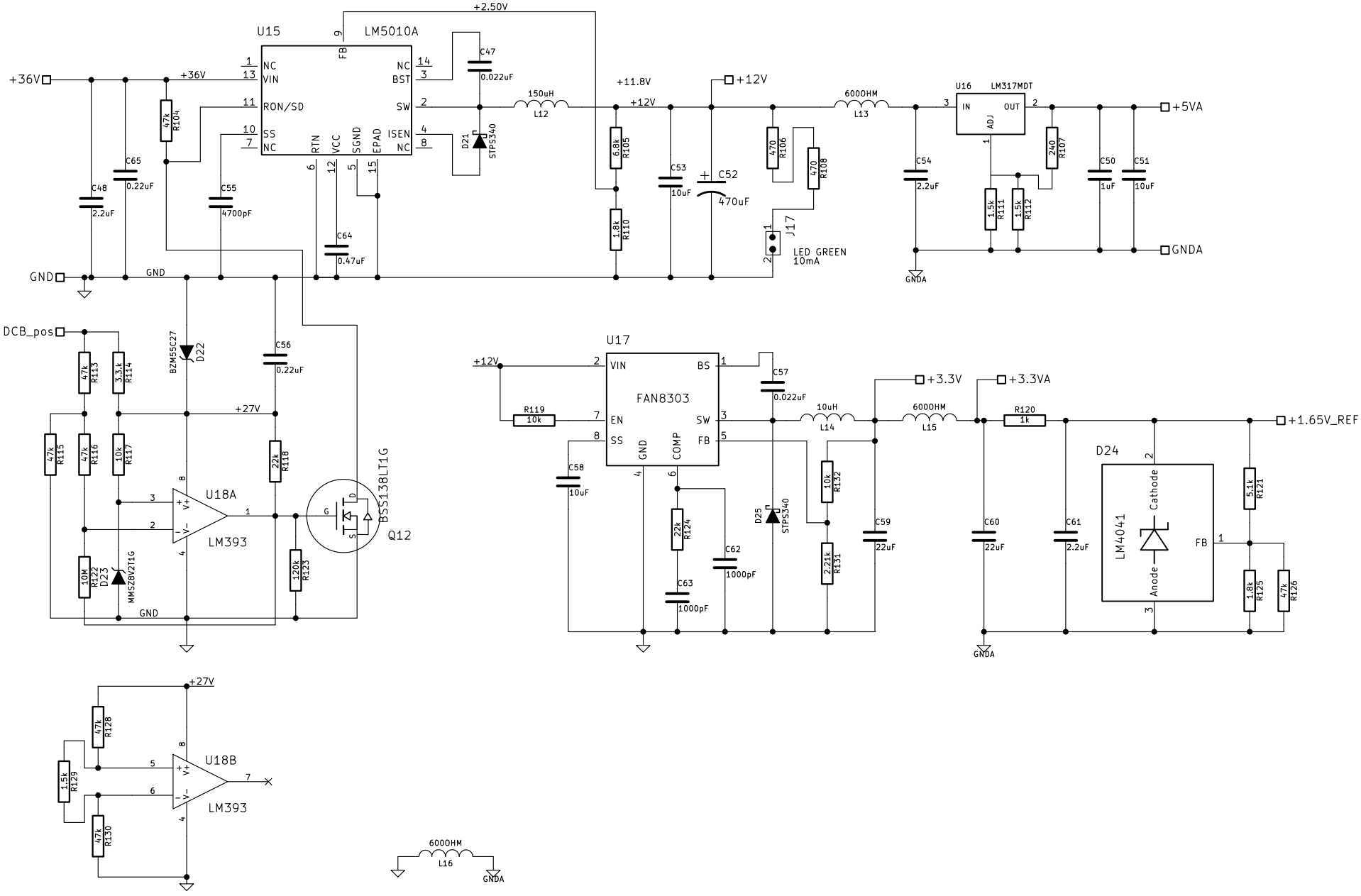
U15
LM5010A
+2.50V
+36V
NC
VIN
RON/SD
SS
NC
FB
NC
BST
SW
ISEN
NC
RTN
VCC
SGND
EPAD
C47
0.022uF
D21
STPS340
150uH
L12
+11.8V
+12V
6000HM
L13
U16
LM317MDT
IN
OUT
ADJ
+5VA
GNDA
C48
2.2uF
C65
0.22uF
R104
47k
C55
4700pF
C64
0.47uF
R105
6.8k
R110
1.8k
C53
10uF
C52
470uF
R106
470
R108
470
J17
LED GREEN
10mA
C54
2.2uF
R111
1.5k
R112
1.5k
R107
240
C50
1uF
C51
10uF
GND
DCB_pos
R113
47k
R114
3.3k
R115
47k
R116
47k
R117
10k
BZM55C27
D22
C56
0.22uF
+27V
R118
22k
U18A
LM393
BSS138LT1G
Q12
R122
10M
D23
MMSZ8V2T1G
R123
120k
U17
FAN8303
+12V
VIN
EN
SS
BS
SW
FB
GND
COMP
R119
10k
C57
0.022uF
10uH
L14
+3.3V
6000HM
L15
+3.3VA
R120
1k
+1.65V_REF
C58
10uF
R124
22k
C62
1000pF
C63
1000pF
D25
STPS340
R132
10k
R131
2.21k
C59
22uF
C60
22uF
C61
2.2uF
D24
LM4041
Cathode
Anode
FB
R121
5.1k
R125
1.8k
R126
47k
R128
47k
R129
1.5k
R130
47k
U18B
LM393
6000HM
L16
GNDA

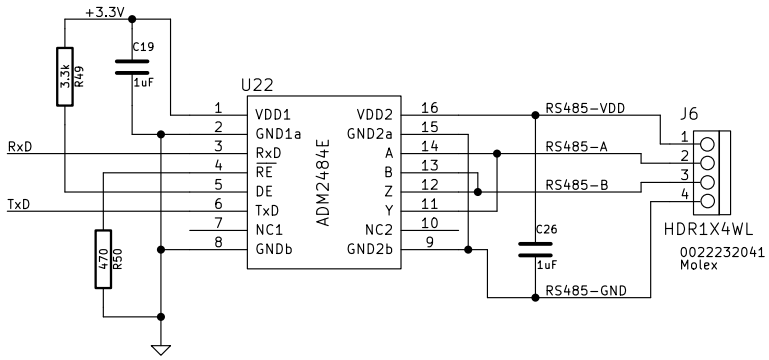
+3.3V
C19
1uF
3.3k
R49
U22
ADM2484E
VDD1
GND1a
RxD
RE
DE
TxD
NC1
GNDb
VDD2
GND2a
A
B
Z
Y
NC2
GND2b
RxD
TxD
470
R50
RS485-VDD
RS485-A
RS485-B
RS485-GND
C26
1uF
J6
HDR1X4WL
0022232041
Molex

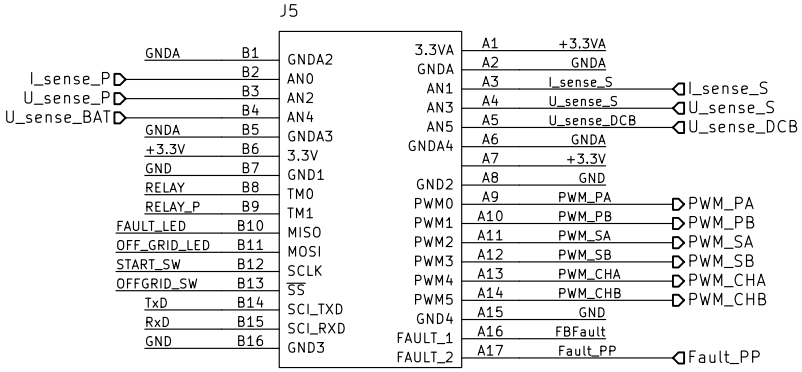
J5
GNDA B1
I_sense_P B2
B3
U_sense_P B4
U_sense_BAT
GNDA B5
+3.3V B6
GND B7
RELAY B8
RELAY_P B9
FAULT_LED B10
OFF_GRID_LED B11
START_SW B12
OFFGRID_SW B13
TxD B14
RxD B15
GND B16
GNDA2
AN0
AN2
AN4
GNDA3
3.3V
GND1
TM0
TM1
MISO
MOSI
SCLK
SS
SCI_TXD
SCI_RXD
GND3
3.3VA A1 +3.3VA
GNDA A2 GNDA
AN1 A3 I_sense_S
AN3 A4 U_sense_S
AN5 A5 U_sense_DCB
GNDA4 A6 GNDA
A7 +3.3V
GND2 A8 GND
PWM0 A9 PWM_PA
PWM1 A10 PWM_PB
PWM2 A11 PWM_SA
PWM3 A12 PWM_SB
PWM4 A13 PWM_CHA
PWM5 A14 PWM_CHB
GND4 A15 GND
FAULT_1 A16 FBFault
FAULT_2 A17 Fault_PP
I_sense_S
U_sense_S
U_sense_DCB
PWM_PA
PWM_PB
PWM_SA
PWM_SB
PWM_CHA
PWM_CHB
Fault_PP

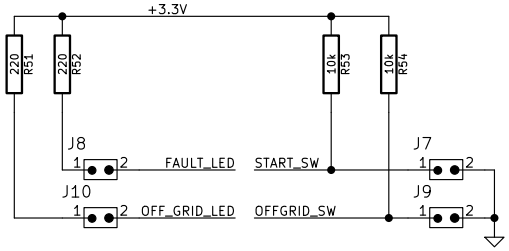
+3.3V
220
R51
220
R52
10k
R53
10k
R54
J8
FAULT_LED
START_SW
J7
J10
OFF_GRID_LED
OFFGRID_SW
J9

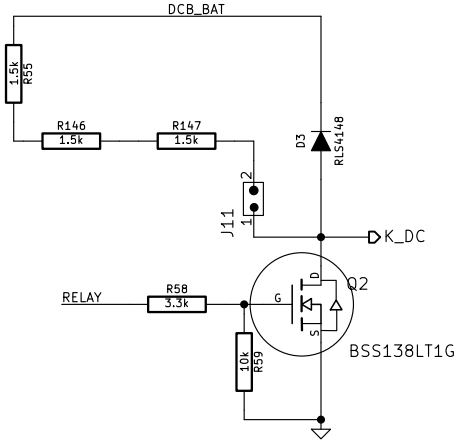
DCB_BAT
1.5k
R55
R146
1.5k
R147
1.5k
D3
RLS4148
J11
K_DC
RELAY
R58
3.3k
Q2
BSS138LT1G
10k
R59

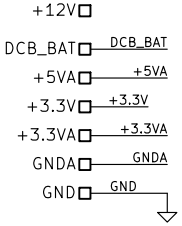
+12V
DCB_BAT
DCB_BAT
+5VA
+5VA
+3.3V
+3.3V
+3.3VA
+3.3VA
GNDA
GNDA
GND
GND

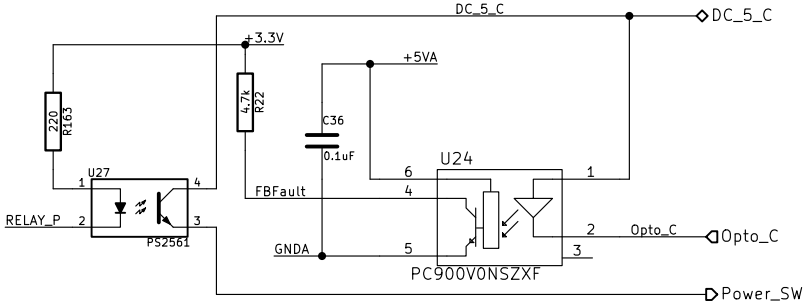
DC_5_C
DC_5_C
+3.3V
+5VA
220
R163
4.7k
R22
C36
0.1uF
U27
PS2561
RELAY_P
U24
FBFault
GNDA
PC900V0NSZXF
Opto_C
Opto_C
Power_SW