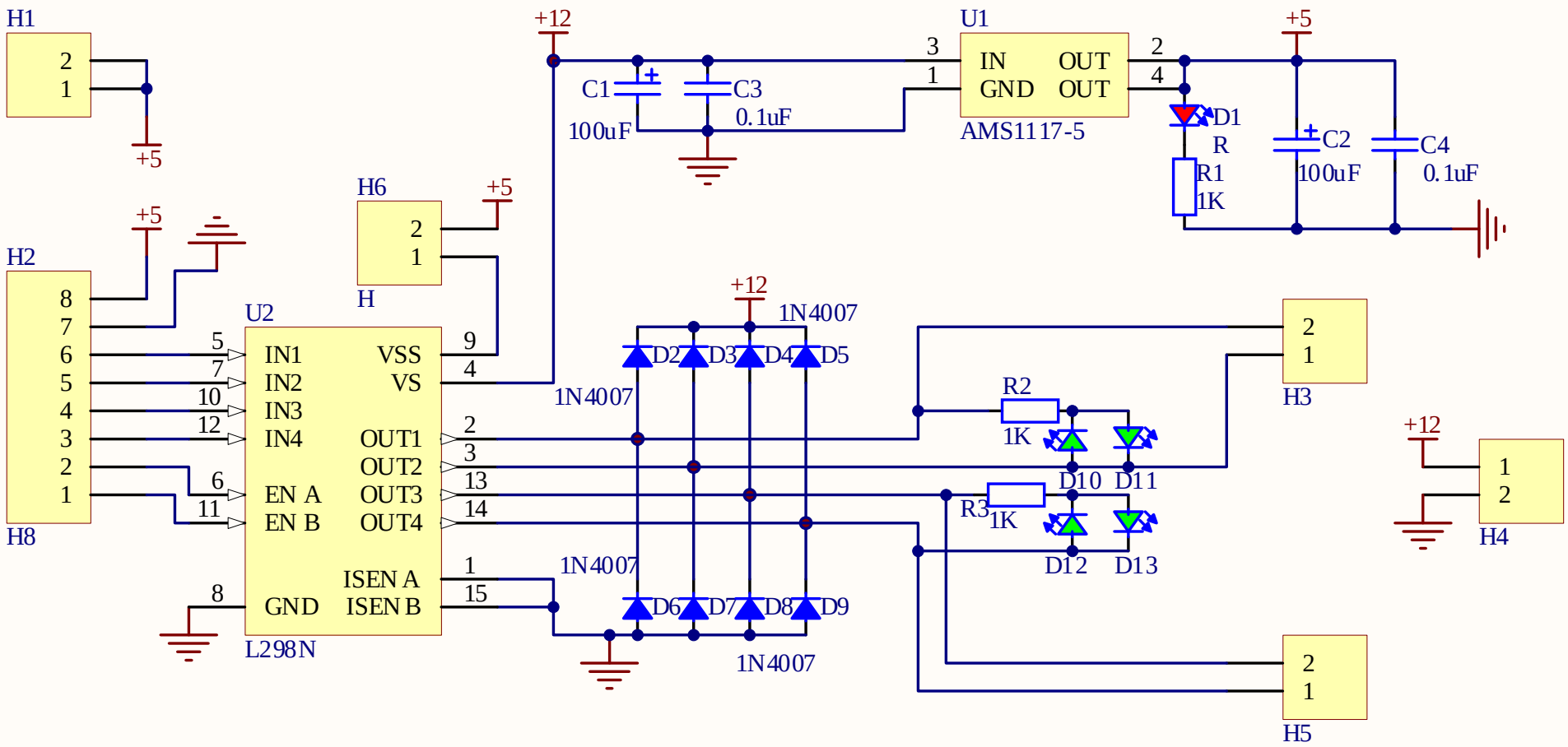

Title		
Size A4	Number	Revision
Date: 2011-11-21		Sheet of
File: E:\单片机\..\L298N.SCHDOC		Drawn By: