Medical Vaporizer Device:

- Reworked previous device design to provide for bluetooth connectivity and new lithium ion battery design
- Created laser alignment test fixture for previous iteration of device

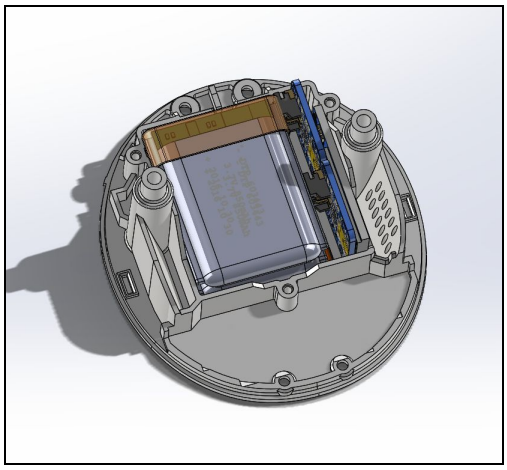

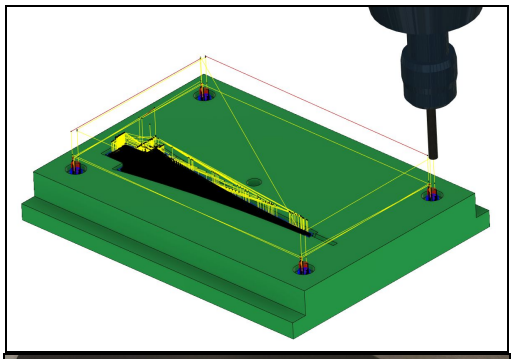

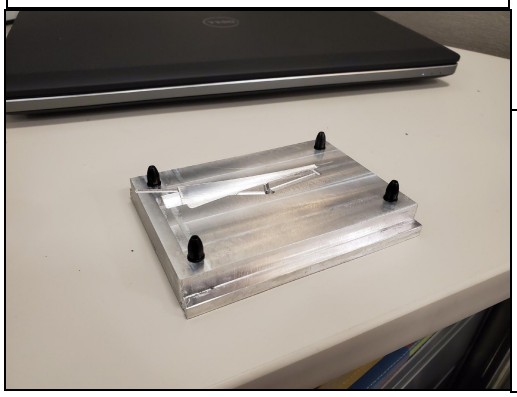

Intracranial Probe Sheath Mold Development:

- Created and manufactured molds for a sheath to encapsulate intracranial probes
- First time the company had CNC milled injection molds in house
- Created workflow for future mold making and CNC manufacturing projects

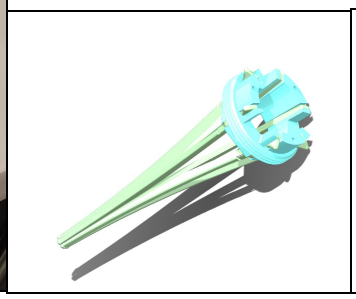

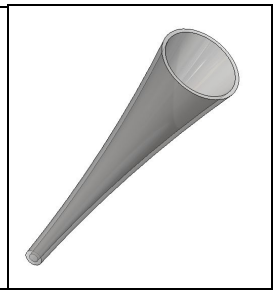

Speaker Leak Test Fixture:
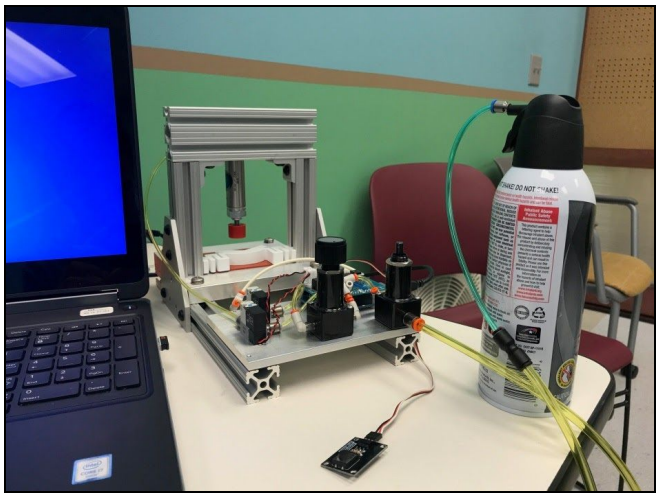
- Developed test fixture to test adhesive seals at the perimeter of speaker for life-dependant medical device
- Wrote program and interface for fixture to be used in both Arduino and LabVIEW
- Implemented test fixture on the production line for the device