KD1902S

Data Sheet
规格书

KD1902S

Omnidirectional SMT Vibration Trigger Sensor
贴片式全方位振动触发传感器

Description / 功能概述

KD1902S is a miniature SMD omnidirectional vibration sensor designed for motion and vibration wake-up applications. The sensor remains in a stable non-operating state under static conditions, and once any vibration or movement occurs, it generates pulse-type switching signals to activate the external circuit. With continuous motion, the output pulses will continue accordingly.
KD1902S 是一款贴片式全方位振动传感器，适用于运动或振动触发唤醒应用。产品在静止状态下保持稳定的非工作状态，当传感器受到任何程度的振动或动作时，将输出脉冲型开关信号以激活外部电路，并在动作持续时保持连续脉冲输出。

The internal ball-contact structure enables highly sensitive detection in all directions, without requiring additional signal conditioning. The device operates with extremely low current, typically as low as 50 nA or limited only by a single external resistor in the application circuit. Its compact mechanical design and practical functionality significantly improve and replace the traditional mechanical vibration sensing structures, making it ideal for low-power motion detection and wake-up systems.
内部滚珠接触结构可实现全方位高灵敏侦测，无需额外信号调节。器件工作电流极低，最低可仅需 50 nA，或由应用电路中的单一限流电阻决定。其微型化的机械设计与实用性全面提升并取代了传统机械式振动感测结构，非常适用于低功耗运动检测与唤醒系统。内部光电结构采用全密封设计，响应稳定、寿命长，具备优异的环境适应性。数字信号输出可直接与 MCU GPIO 接口连接，适用于多种运动触发类应用。

Features / 产品特性

• SMD omnidirectional vibration sensor with miniature rolling-ball structure
贴片式全方位振动传感器，采用微型滚珠结构设计
• Generates pulse output when vibration, shock or motion is detected, enabling wake-up sensing
在受到振动、冲击或运动时立即输出脉冲信号，实现唤醒触发功能
• Ultra-compact design for easy integration into space-limited devices.
体积小巧，适用于空间受限的应用产品
• High-temperature resistant shell (up to 400°C) with vacuum core-shell process and premium electroplating finish; service life up to 1,000,000 cycles.
外壳耐高温(最高可达 400°C)，采用抽真空核壳工艺和优良电镀处理，寿命可达 1,000,000 次
• Meets RoHS and REACH SVHC environmental compliance standards.
材料符合 RoHS 与 REACH SVHC 环保标准。
• Fully tested and hermetically sealed to provide dustproof and waterproof performance.
产品经 100%测试，密封封装设计，具备防尘防水性能。

Applications / 应用领域

This SMD omnidirectional vibration sensor is designed for motion wake-up and vibration detection, suitable for compact devices requiring low power consumption and reliable triggering.
该贴片式全方位振动传感器用于运动唤醒与振动检测，特别适用于对低功耗与触发可靠性有要求的小型设备。

Typical applications include:
典型应用包括：
• Smart pens and handwriting devices
智能笔及书写设备
• Wearable and portable electronics
可穿戴及便携式电子产品
• Anti-theft and motion alarm systems
智能防盗与运动报警系统
• Automotive electronics & GPS / GPRS trackers

汽车电子与 GPS/GPRS 追踪器

- TPMS, RFID smart tags
  胎压监测（TPMS）、RFID 智能标签
- Smart home products (lighting, locks, garbage bins, humidifiers, etc.)
  智能家居产品（照明、智能锁、垃圾桶、加湿器等）
- Remote controllers and power-saving triggers
  遥控器省电触发
- Consumer and interactive smart devices
  消费电子与互动设备

Product Specification / 产品规格

Rated Voltage 额定电压	0.5-36Vdc
Rated Current 额定电流	50nA (0. 05μA) -10mA
Contact Resistance 接触电阻	30 MΩ Max
Insulation Resistance 绝缘电阻	>10MΩ
Temperature Range 耐温	-40℃~85℃
Vibration Lifetime 振动寿命	⩾ 2,000,000 cycles

Functional Characteristics / 功能特性

1. Operating Principle / 工作原理

The KD1902S vibration sensor operates using an internal free-moving metallic ball that forms

intermittent contact with electrodes as vibration or displacement occurs.
KD1902S 震动传感器通过内部金属滚珠在振动或位移时与电极产生间歇性接触实现检测。

When the device is static, the output remains in an open (non-conductive) state.When vibration or movement is detected from any direction, the bouncing motion of the ball generates rapid contact pulses, triggering the wake-up circuitry of the application device.
产品在静止状态下输出保持断开状态；当受到来自任意方向的振动或位移时，滚珠产生跳动接触，从而输出脉冲信号以唤醒应用电路。

2. Omni-Directional Sensitivity / 全方位灵敏响应

The sensing mechanism allows the ball to move freely within a 360° cavity, enabling vibration detection regardless of orientation.
滚珠可在 360° 范围内自由运动，实现空间方向无死角感知。

Sensitivity is optimized along the four major axes (0°, 90°, 180°, 270°), providing reliable performance under random vibration conditions.
在四个主方向位置（0°、90°、180°、270°）具备更高灵敏度，可在随机振动环境中保持稳定输出。

A visual representation of direction-based sensitivity is shown in the diagram below.
灵敏度分布请参见下图示意。

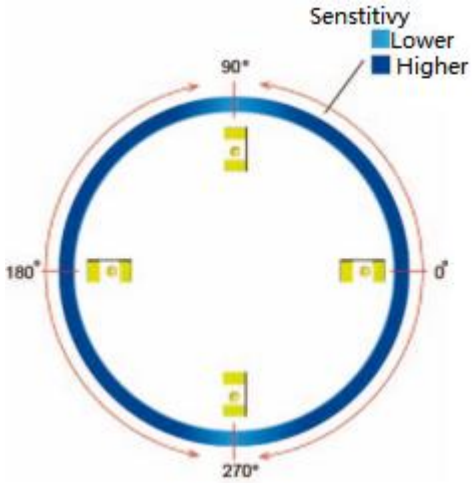

3. Switching Behavior / 开关响应特性

The device is normally-open (NO).
产品属于常开结构。

Upon vibration input, the output transitions from high impedance to conductive state, generating pulse signals determined by the vibration amplitude and frequency.
当振动产生时，输出由高阻态转换为导通状态，并根据振动幅度和频率产生脉冲输出信号。

4. Power Consumption Behavior / 功耗特性

This is a fully passive device that requires no bias power to operate.
该传感器为完全被动器件，无需驱动电源即可响应。

Power consumption depends only on external circuitry resistance applied in the user design.
功耗仅取决于用户应用电路中的单一限流电阻设置。

Mechanical Dimensions / 机械尺寸

Mechanical dimensions are shown as follows. All dimensions are in millimeters unless otherwise specified.
产品机械尺寸如下，除特别说明外，单位均为毫米。

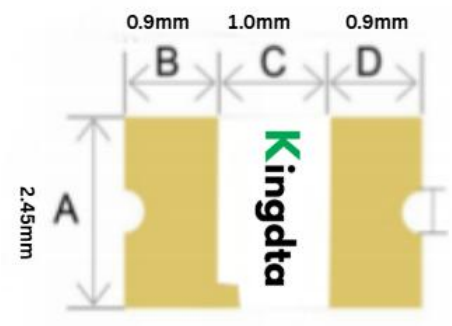

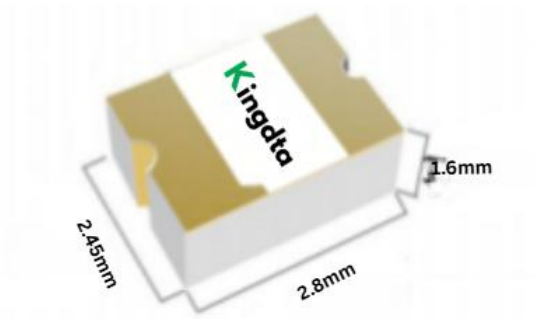

Application Guidance / 应用指南

1. Sensor Evaluation 传感器评估

The KD1902S omnidirectional vibration sensor does not require power-down during standby. The sensor remains in a stable conductive state when resting. Small vibrations may still cause pulse output; therefore, microcontroller software filtering is recommended to ensure correct wake-up behavior.
KD1902S 全向振动传感器在待机状态下无需断电。传感器在静止时保持稳定导通状态，但轻微振动仍可能产生脉冲输出，因此建议通过 MCU 软件延时判断与计数过滤来确保唤醒逻辑稳定。

If DC-level sensing is used, hardware filtering alone may not fully suppress micro-motion noise. A high-pass filter can be added to ensure a well-defined resting output if required.
在直流电平检测场景下，仅依靠硬件过滤可能无法完全抑制微小震动噪声。
如对休眠状态有明确电平需求，可采用高通滤波方案辅助稳定输出。

For application logic, MCU should monitor state transitions(Open → Close or Close → Open) rather than the static ON/OFF state.
对于软件检测而言，MCU 应关注状态变化事件（由断开到导通或由导通到断开），而不是持续保持的电平状态。

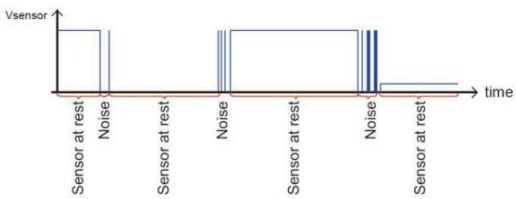

Figure 1:Micro vibration sensor,contacts not necessarily closed at rest (idealized plot)

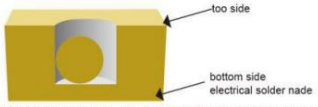

Figure 2:Micro vibration sensor,micro sphere at rest, contacts not necessarily closed

2. Recommended Application Circuit 推荐应用电路

2.1 Basic Connection 基本连接电路

Below shows correct and incorrect circuit connection examples for motion / wake-up sensing:
以下示例展示了动作/唤醒检测的正确和错误接法：

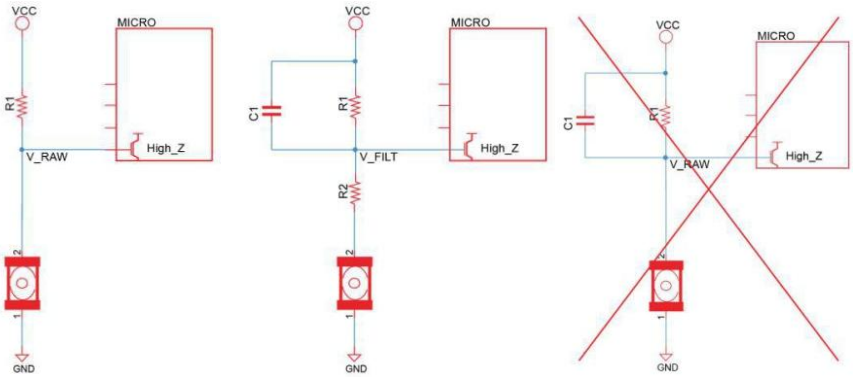

Design Notes / 设计注意事项：

- Select pull-up resistor based on current consumption and MCU IO characteristics
  上拉电阻依据系统功耗与 MCU I/O 特性选择
- Software should perform debounce and event count filtering
  软件需加入去抖和事件计数过滤
- The filtered version improves noise immunity in high-sensitivity design
  滤波电路适用于高灵敏度或噪声环境应用
- Do NOT short sensor directly to power rail
  严禁将传感器直接短接至电源轨

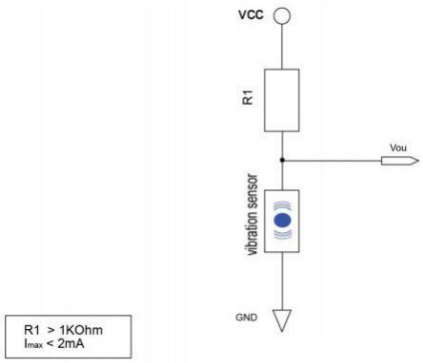

2.2 Sensitivity Adjustment Circuit (Filter Circuit)灵敏度调整电路（过滤电路）

If reduced sensitivity is required for noise or micro-motion suppression,a capacitor can be added as shown below:
若需降低灵敏度以避免噪音触发或微弱震动触发，可增加电容，具体电路如下：

To reduce unwanted small-amplitude vibrations or random noise triggers, an RC filter network can be added at the signal output. As shown in below, capacitor C1 and resistor R2 form a low-pass filter that limits transient pulse current and smooths the output signal.
为了降低由微弱震动或随机噪声引起的误触发，可在信号输出端增加 RC 滤波网络。如下图所示，电容 C1 与电阻 R2 构成低通滤波回路，用于限制瞬态脉冲电流并对输出信号进行平滑处理。

When the impedance of capacitor C1 becomes low (e.g., under high frequency vibration), the filtering effect becomes stronger and the pulse output width is reduced.
当电容 C1 阻抗变低（如在较高频率振动条件下）时，滤波效果增强，输出脉冲宽度会被缩短。

High-value resistors help reduce power consumption, but the total circuit impedance must be considered when designing wake-up response timing.
高阻值电阻有助于降低功耗，但需考虑电路总阻抗对唤醒响应时间的影响。

Application Circuit

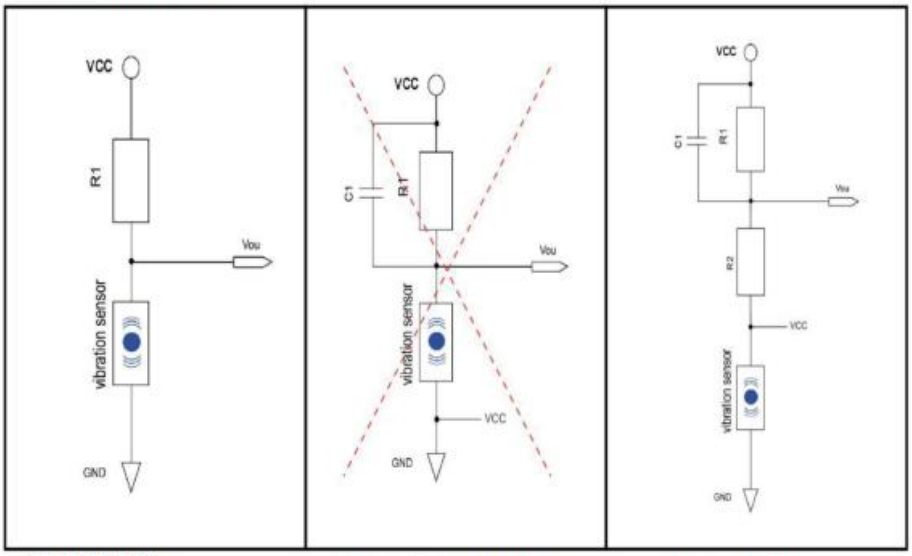

Basic Circuit **Unsuggested Circuit** **Filter Circuit**

Soldering Characteristics / 焊接特性

Manual Soldering

手工焊接

• Max tip temperature: **300°C ±5°C**

烙铁温度 **300°C ±5°C**

• Max contact time: **< 3 seconds**

接触时间 **< 3 秒**

Reflow Soldering (SMT)

回流焊接（SMT）

• Preheating / 预热阶段

Preheat the PCB so that the copper surface temperature reaches **180°C**, The preheating duration should be **2 ± 0.3 minutes** before entering the reflow soldering zone.

电路板预热至铜箔表面温度达到 **180°C**，并在进入回流焊接区前保持 **2 ± 0.3 分钟**。

• Reflow Soldering / 回流阶段

The peak temperature on the copper surface shall not exceed **260°C**, and the duration above peak temperature must be **≤ 5 seconds**, then the PCB should move to the cooling zone.

回流焊时铜箔表面峰值温度不得超过 **260°C**，且在峰值温度以上的停留时间须 **≤ 5 秒**，随后进入冷却区。

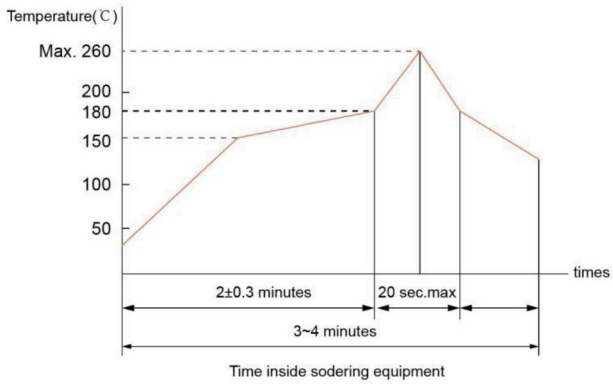

Flux Requirements

助熔剂要求

• Do not use strong acid or alkaline flux

助焊剂不得使用强酸性或强碱性材料

General Caution

注意

• Avoid mechanical stress during and after soldering
焊接过程中及焊后需避免机械应力
• Do not reflow more than twice
不建议回流焊超过两次
• Allow full cooling before handling
冷却前请勿搬动或外力按压器件

Packaging/包装

Tape&Reel packing
编带包装

4000pcs/Packing
4000pcs/盘

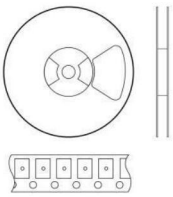

Notes & Safety Instructions/注意事项

1. Perform application-specific verification before use.
Before using this product, perform necessary tests and verification under actual application conditions to ensure proper functionality and reliability.
在使用本产品之前，应根据实际应用环境和条件进行必要的功能与可靠性测试，确认产品能够满足要求。

2. Use this product according to its intended purpose and specifications.
Refer to the datasheet for product characteristics, performance limits, and recommended operating conditions.
请依据产品特性、性能限制及规格书中规定的适用条件进行使用。

3.This product is not intended for life-support, safety-critical, or high-reliability systems.
Do not use the product in medical life-support equipment, safety protection systems, or devices requiring extremely high reliability.
本产品不得用于医疗生命维持设备、安全关键系统或其他需极高可靠性的装置。

4. Avoid contact with corrosive or conductive substances.
Keep the product away from acids, alkalis, corrosive chemicals, moisture, and conductive liquids to prevent damage.
Also avoid placing the product near strong magnetic or ferromagnetic materials.
请避免产品接触酸性、碱性、腐蚀性化学品及导电液体（如水、湿气），以防损坏。同时避免将产品置于强磁场或铁磁性物体附近。