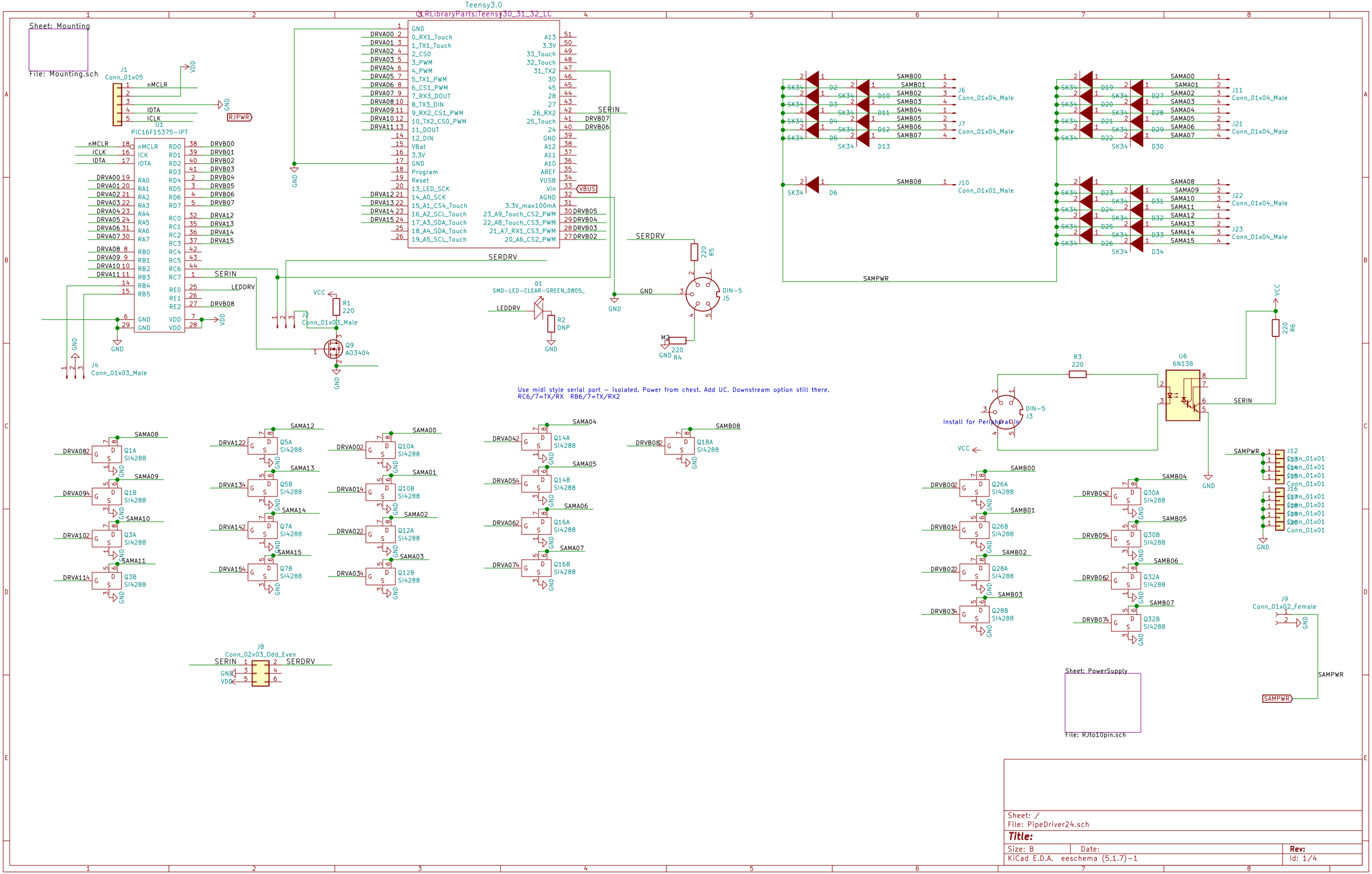

Sheet: Mounting
File: Mounting.sch
U3
Teensy3.0
GLRLibraryParts:Teensy30_31_32_LC
U1
PIC16F15375-IPT
J1
Conn_01x05
J2
Conn_01x03_Male
J4
Conn_01x03_Male
J5
DIN-5
J6
Conn_01x04_Male
J7
Conn_01x04_Male
J10
Conn_01x01_Male
J11
Conn_01x04_Male
J21
Conn_01x04_Male
J22
Conn_01x04_Male
J23
Conn_01x04_Male
J3
DIN-5
Install for Peripheral In
U6
6N138
J8
Conn_02x03_Odd_Even
J9
Conn_01x02_Female
Use midi style serial port - isolated. Power from chest. Add UC. Downstream option still there.
RC6/7=TX/RX RB6/7=TX/RX2
Sheet: PowerSupply
File: RJto10pin.sch
Sheet: /
File: PipeDriver24.sch
Title:
Size: B
Date:
Rev:
KiCad E.D.A. eeschema (5.1.7)-1
Id: 1/4

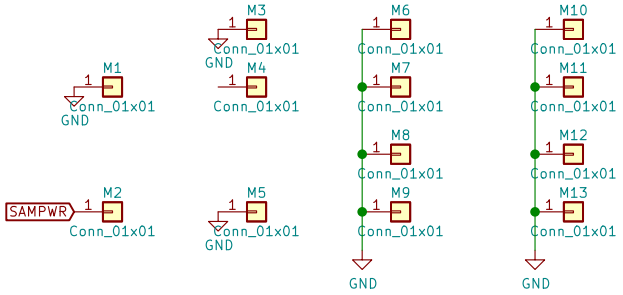

Sheet: /Mounting/		
File: Mounting.sch		
Title:		
Size: A4	Date:	**Rev:**
KiCad E.D.A. eeschema (5.1.7)-1		Id: 2/4

Sheet: Mounting

File: Mounting.sch

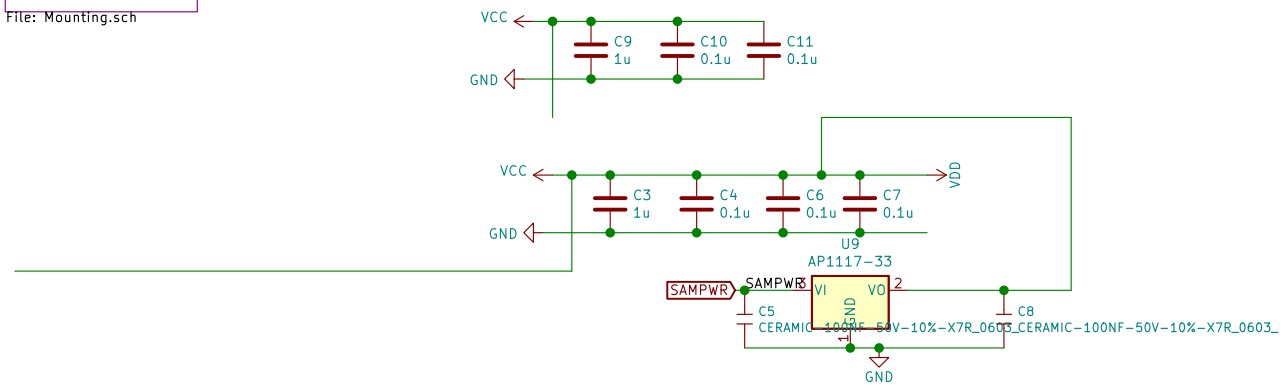

Install for Host Out

Install for Peripheral In

Sheet: /PowerSupply/
File: RJto10pin.sch

Title:

Size: A4	Date:	**Rev:**
KiCad E.D.A. eeschema (5.1.7)-1		Id: 3/4

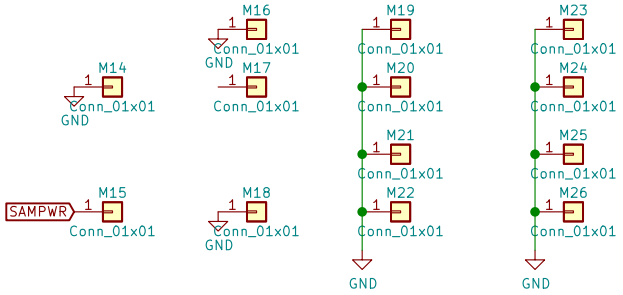

Sheet: /PowerSupply/Mounting/		
File: Mounting.sch		
Title:		
Size: A4	Date:	**Rev:**
KiCad E.D.A. eeschema (5.1.7)-1		Id: 4/4