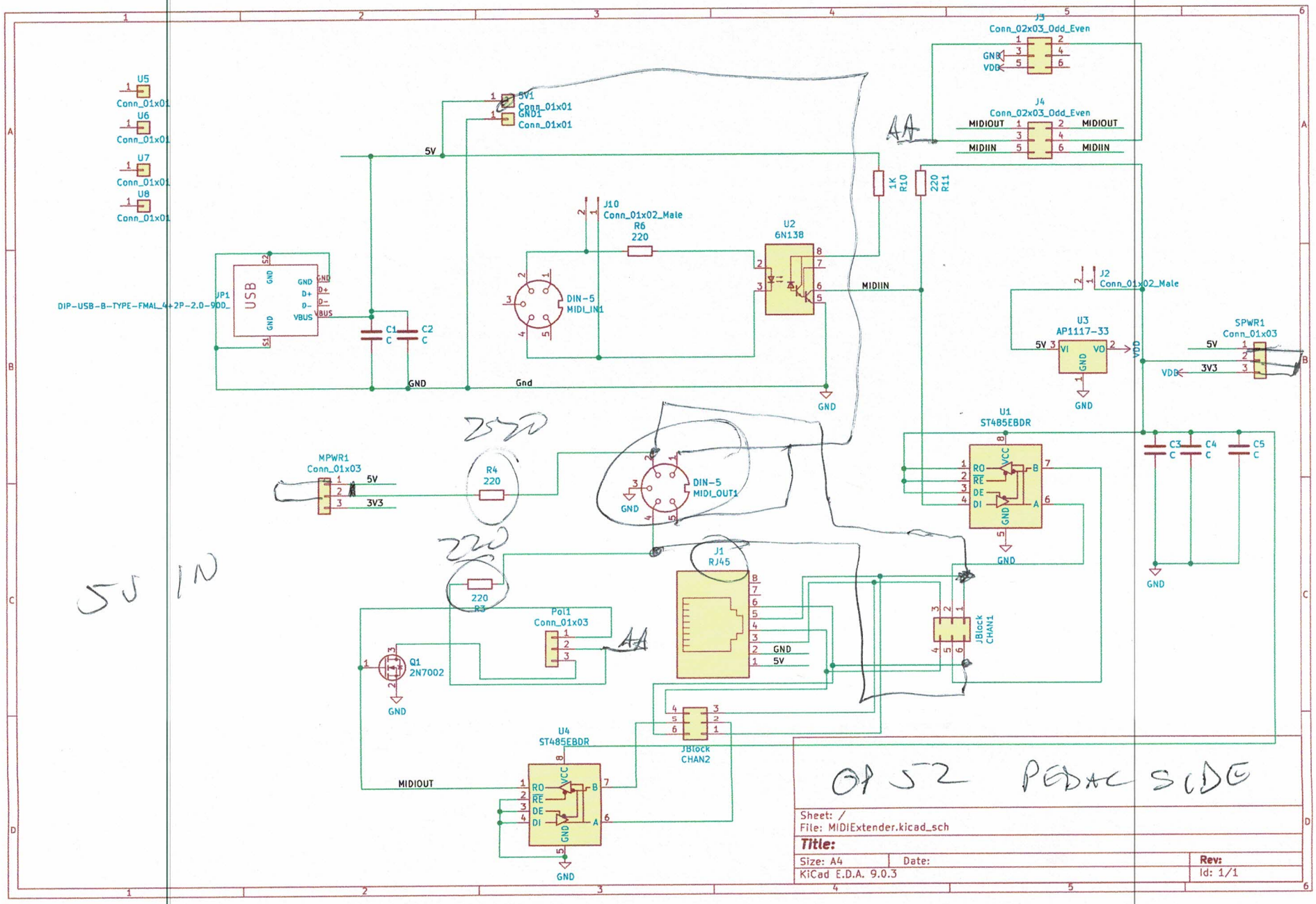
U5
Conn_01x01
U6
Conn_01x01
U7
Conn_01x01
U8
Conn_01x01
5V1
Conn_01x01
GND1
Conn_01x01
5V
J3
Conn_02x03_Odd_Even
GND
VDD
J4
Conn_02x03_Odd_Even
MIDIOUT
MIDIIN
1K
R10
220
R11
J10
Conn_01x02_Male
R6
220
U2
6N138
DIN-5
MIDI_IN1
MIDIIN
J2
Conn_01x02_Male
U3
AP1117-33
VI
VO
GND
VDD
SPWR1
Conn_01x03
3V3
JP1
DIP-USB-B-TYPE-FMAL_4+2P-2.0-90D_
USB
GND
D+
D-
VBUS
C1
C
C2
C
Gnd
U1
ST485EBDR
RO
RE
DE
DI
VCC
A
B
C3
C4
C5
MPWR1
Conn_01x03
R4
220
DIN-5
MIDI_OUT1
J1
RJ45
220
R3
Pol1
Conn_01x03
Q1
2N7002
JBlock
CHAN1
JBlock
CHAN2
U4
ST485EBDR
MIDIOUT
5V IN
OP J2 PEDAL SIDE
Sheet: /
File: MIDIExtender.kicad_sch
Title:
Size: A4
Date:
Rev:
KiCad E.D.A. 9.0.3
Id: 1/1

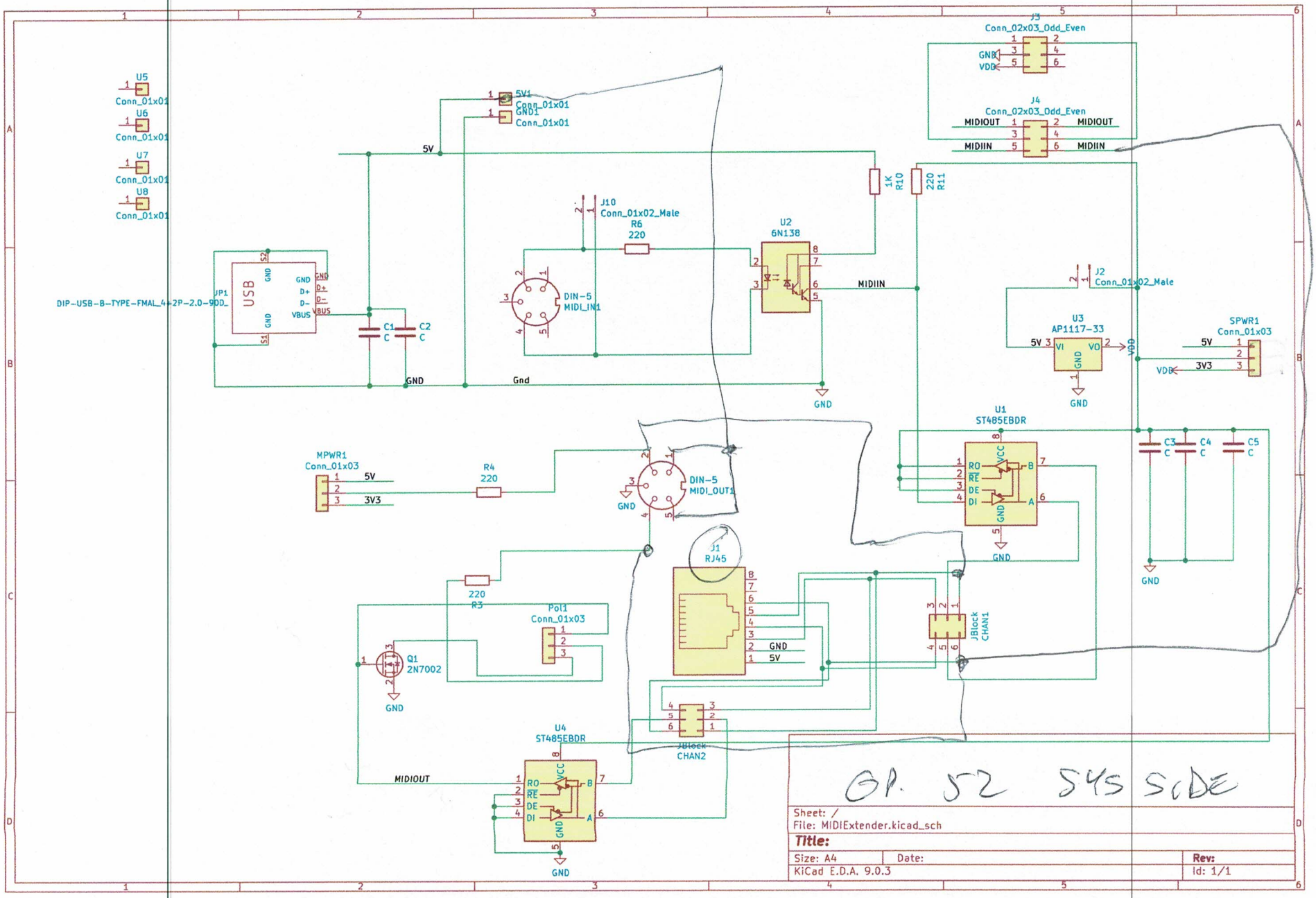
U5
Conn_01x01
U6
Conn_01x01
U7
Conn_01x01
U8
Conn_01x01
5V1
Conn_01x01
GND1
Conn_01x01
5V
J3
Conn_02x03_Odd_Even
GNB
VDD
J4
Conn_02x03_Odd_Even
MIDIOUT
MIDIIN
1K
R10
220
R11
J10
Conn_01x02_Male
R6
220
U2
6N138
DIN-5
MIDI_IN1
DIP-USB-B-TYPE-FMAL_4+2P-2.0-90D_
JP1
USB
GND
D+
D-
VBUS
C1
C
C2
C
GND
Gnd
J2
Conn_01x02_Male
U3
AP1117-33
VI
VO
SPWR1
Conn_01x03
3V3
U1
ST485EBDR
RO
RE
DE
DI
VCC
C3
C4
C5
MPWR1
Conn_01x03
R4
220
DIN-5
MIDI_OUT1
J1
RJ45
220
R3
Pol1
Conn_01x03
Q1
2N7002
JBlock
CHAN1
JBlock
CHAN2
U4
ST485EBDR
MIDIOUT
GP. 52 SYS SIDE
Sheet: /
File: MIDIExtender.kicad_sch
Title:
Size: A4
Date:
Rev:
KiCad E.D.A. 9.0.3
Id: 1/1

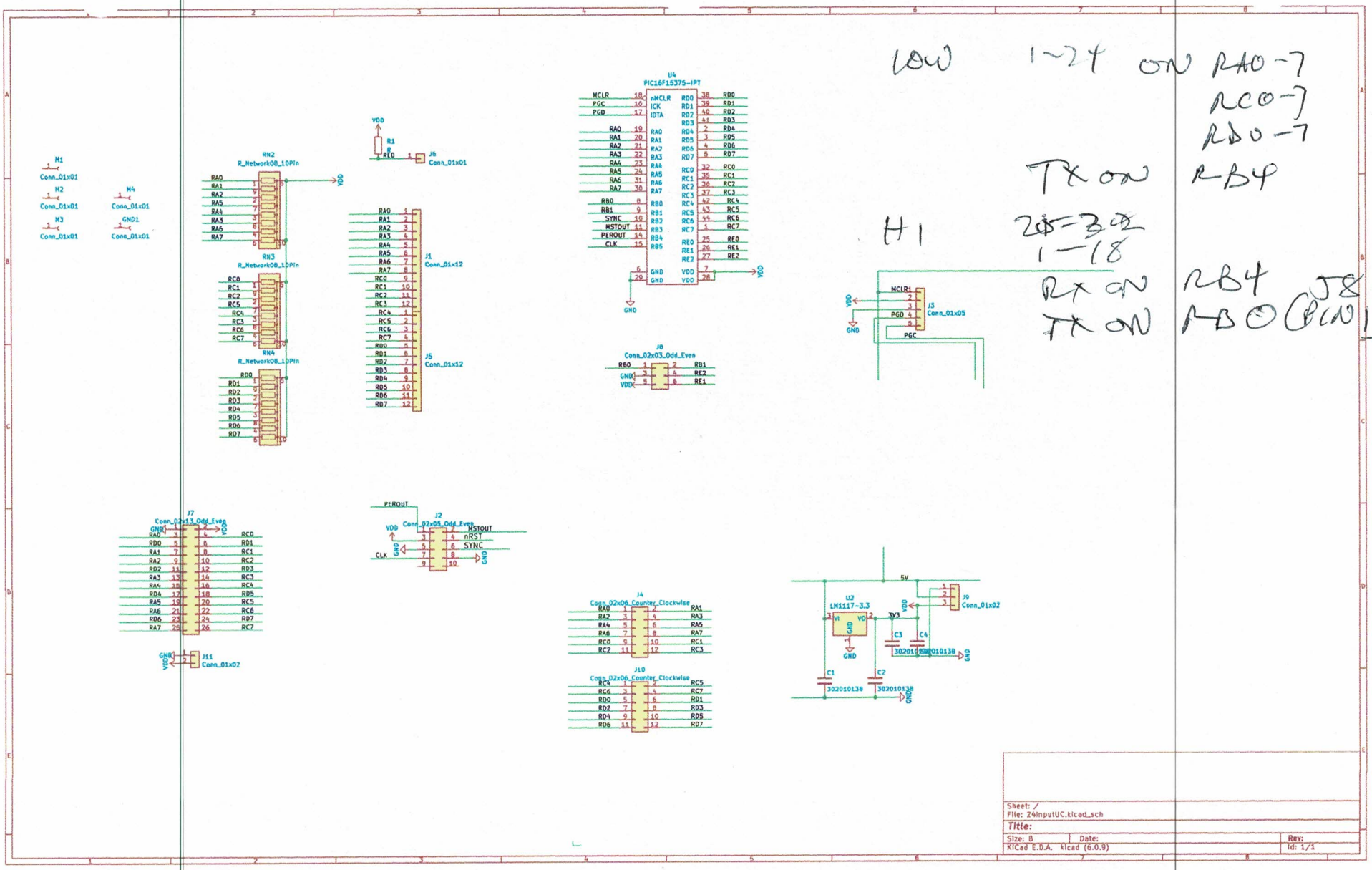
LOW 1~24 ON RA0-7
RC0-7
RD0-7
TX ON RB4
HI 25-32
1-18
RX ON RB4
TX ON RB0 (PIN)
U4
PIC16F15375-IPT
RN2
R_Network08_10Pin
RN3
R_Network08_10Pin
RN4
R_Network08_10Pin
J1
Conn_01x12
J5
Conn_01x12
J6
Conn_01x01
J8
Conn_02x03_Odd_Even
J5
Conn_01x05
J7
Conn_02x13_Odd_Even
J2
Conn_02x05_Odd_Even
J4
Conn_02x06_Counter_Clockwise
J10
Conn_02x06_Counter_Clockwise
J11
Conn_01x02
U2
LM1117-3.3
J9
Conn_01x02
M1
Conn_01x01
M2
Conn_01x01
M3
Conn_01x01
M4
Conn_01x01
GND1
Conn_01x01
Sheet: /
File: 24InputUC.kicad_sch
Title:
Size: B
Date:
Rev:
KiCad E.D.A. kicad (6.0.9)
Id: 1/1