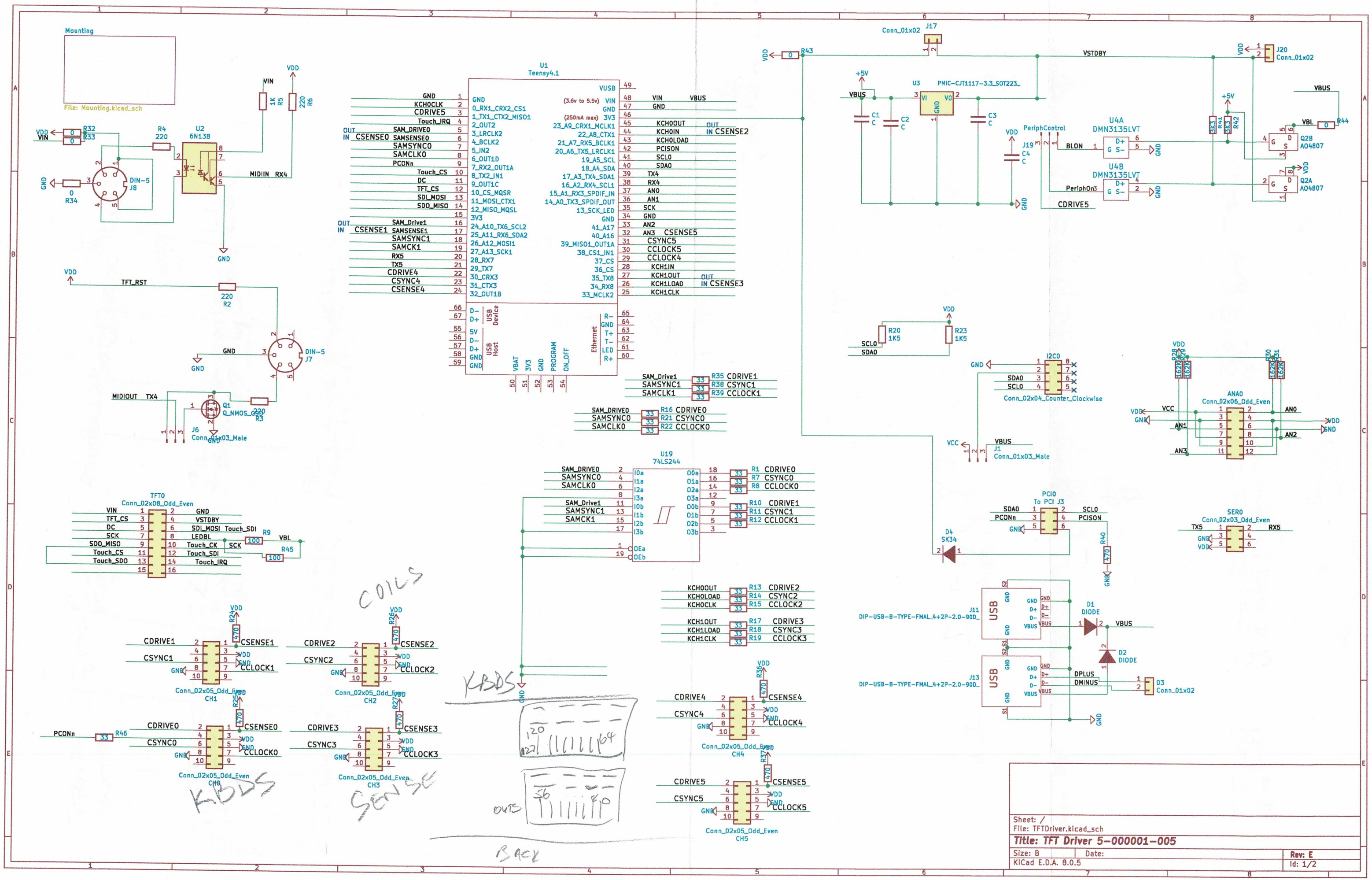

Sheet: /
File: TFTDriver.kicad_sch

Title: TFT Driver 5-000001-005

Size: B	Date:	Rev: E
KiCad E.D.A. 8.0.5		Id: 1/2

	OFF	ON	SENSE
16S	126	127	95
16Q	124	125	94
8P	122	123	93
8B	120	121	92
4	110	111	91
III	108	109	90
	106	107	89
16	104	105	88
8	118	119	74
4	116	117	75
S/P	88	89	76
S/P4	112	113	77
S/P	102	103	78
S/P4			
8	64	65	79
8	98	99	82
8	96	97	83
4	94	95	84
4	92	93	85
2	90	91	86
113	84	85	87
III	82	83	66
8	80	81	67
8	78	79	68
TR	76	77	69
16	74	75	70
40	70	71	71
4	73	69	127

	OFF	ON	SENSE
8	0*	24	
4	57	56	125
III	6	8	126
8	4	5	99
			100
16	42	1	122
8	54	58	119
8	52	59	118
8	50	51	117
4	32	39	116
4	35	37	115
223	34*	33	114
2	30	31	111
135	28	55	110
IV	26	27	109
8	22	23	108
CH	20	21	107
S/16	18	19	106
8	9	15	103
4	12	13	102
S/16	10	11	101
8	46	47	124
4	44	45	123

107X
3X
36X
14X 38X
16X
114X

56 - 59 (DEAD?)
60 - 68 OPEN OK