RegulatedOutputVoltage and PowerDissipation

R1=120R, R2=390R, Vout=5.3V, R1PD=13mW, R2PD=36mW
R1=120R, R2=750R, Vout=9.1V
R1=120R, R2=1K Vout=11.6V, R1PD=13mW, R2PD=116mW

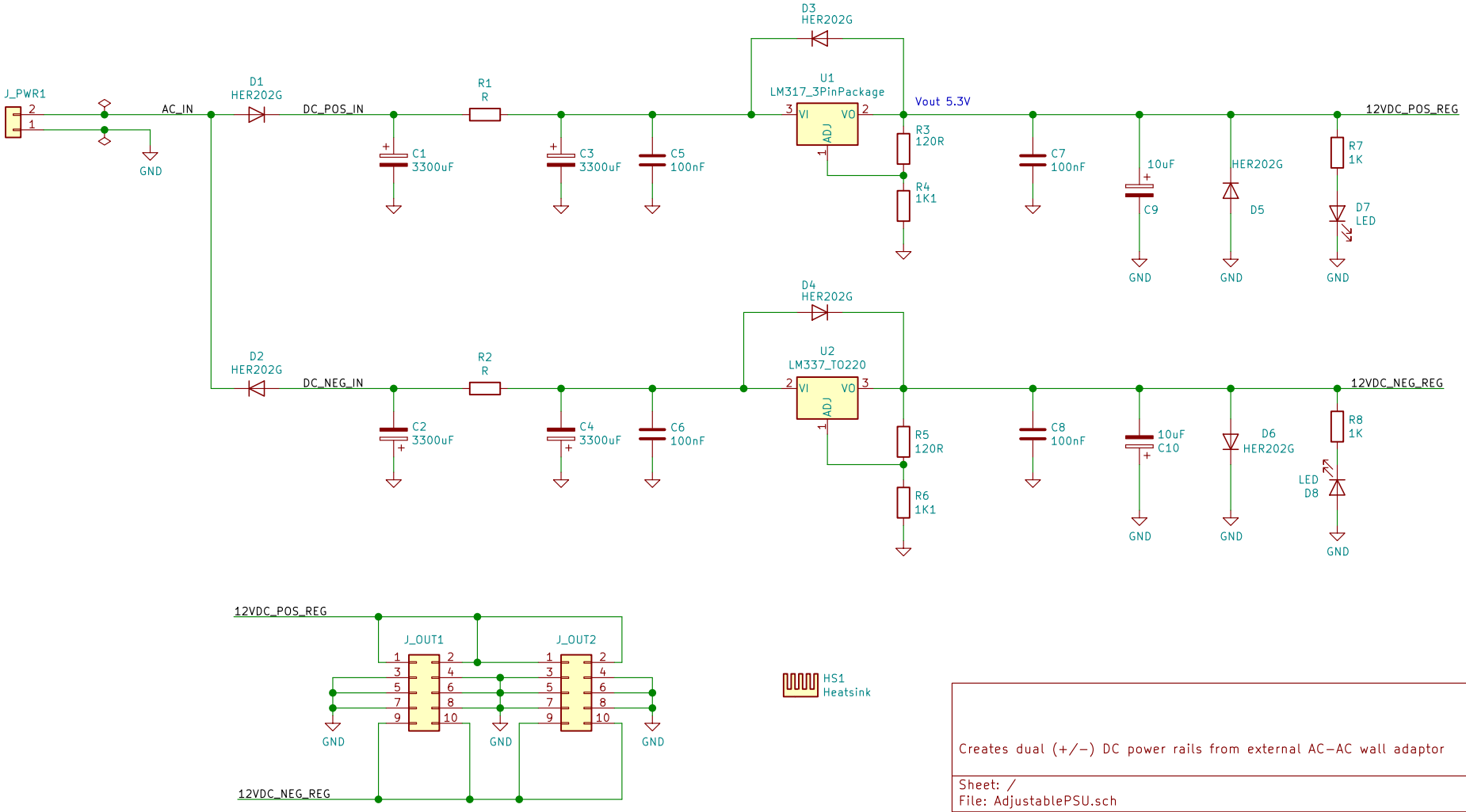

Creates dual (+/−) DC power rails from external AC−AC wall adaptor

Sheet: /
File: AdjustablePSU.sch

Title: Full−Wave Voltage Multiplier PSU

Size: A4	Date: 2019−02−08	Rev: D
KiCad E.D.A. kicad (5.0.0−3−g5ebb6b6)		Id: 1/1