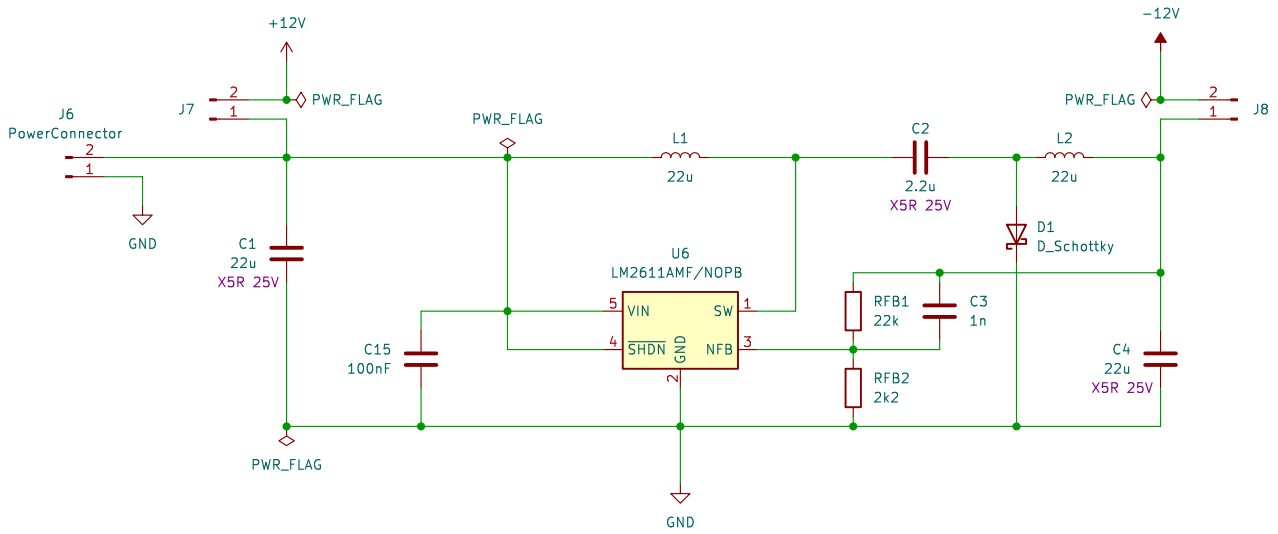

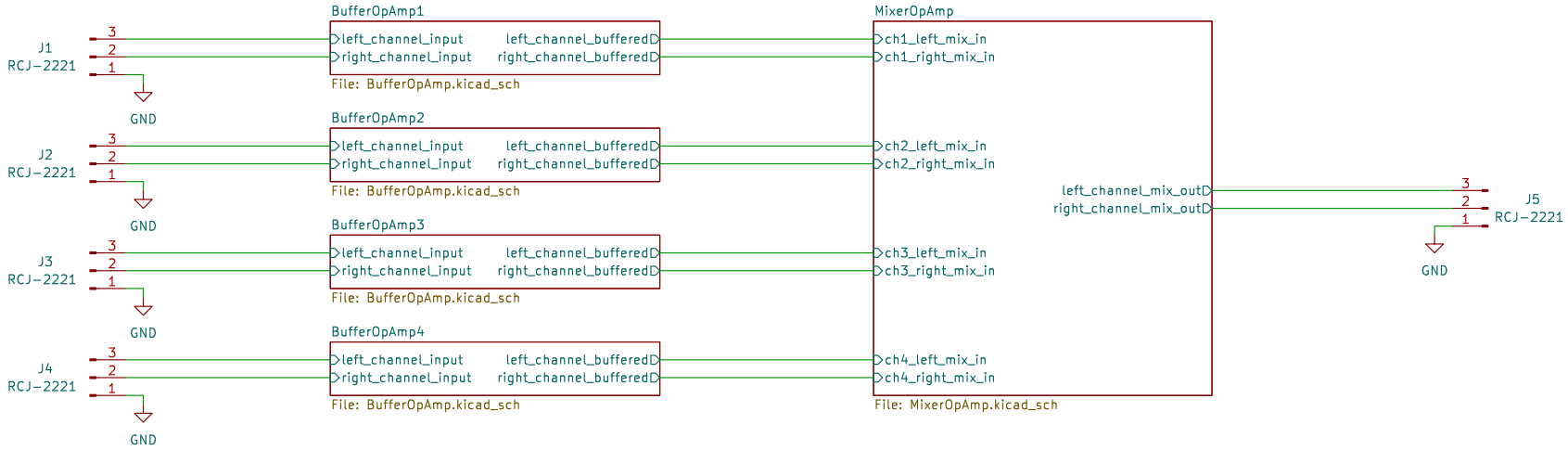

H1 MountingHole
H2 MountingHole
H3 MountingHole
H4 MountingHole

Sheet: /
File: Tiny4xPoweredStereoMixer.kicad_sch

Title:

Size: A4	Date:	**Rev:**
KiCad E.D.A. 8.0.1		Id: 1/6

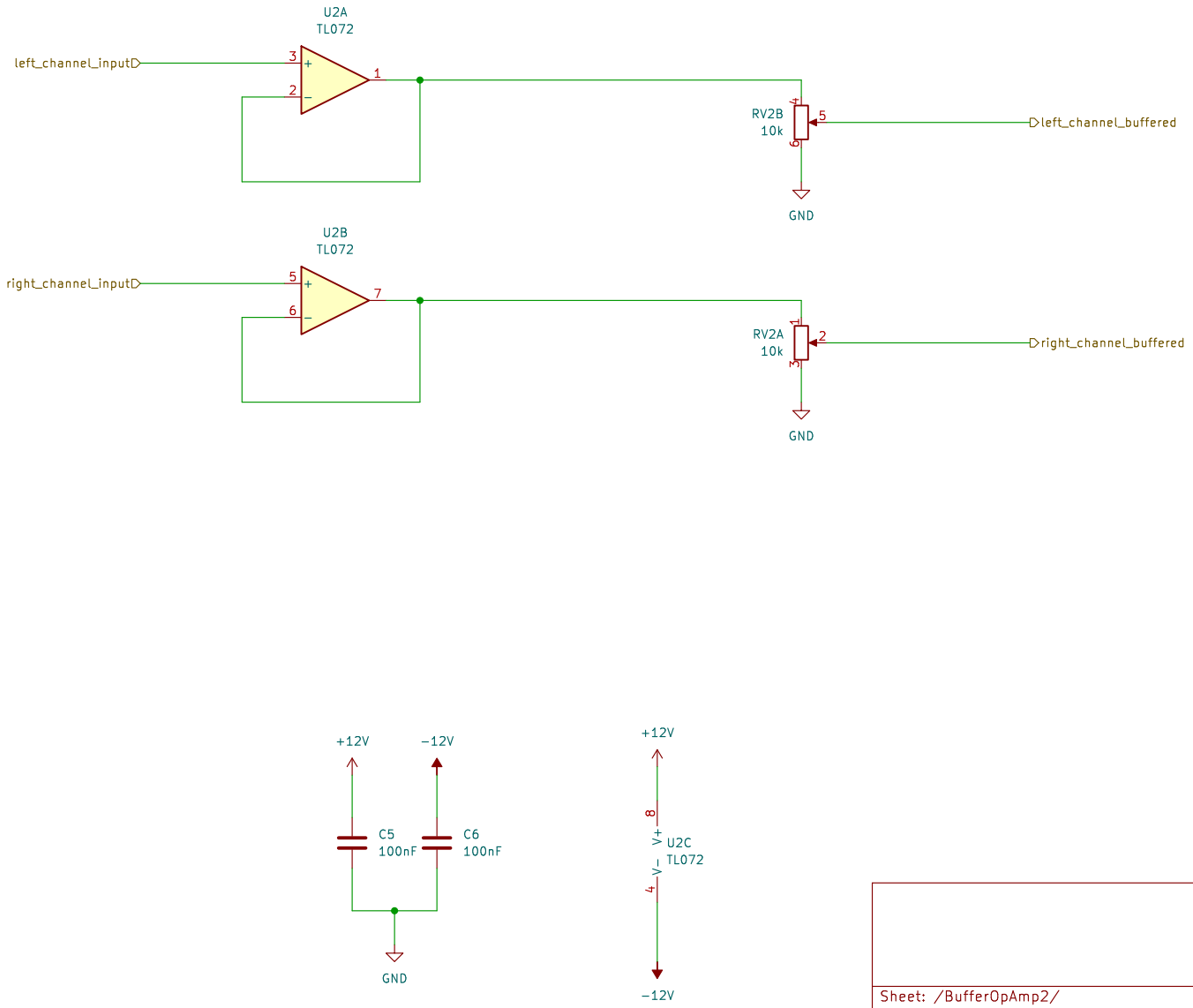

Sheet: /BufferOpAmp2/
File: BufferOpAmp.kicad_sch

Title:

Size: A4	Date:	**Rev:**
KiCad E.D.A. 8.0.1		Id: 2/6

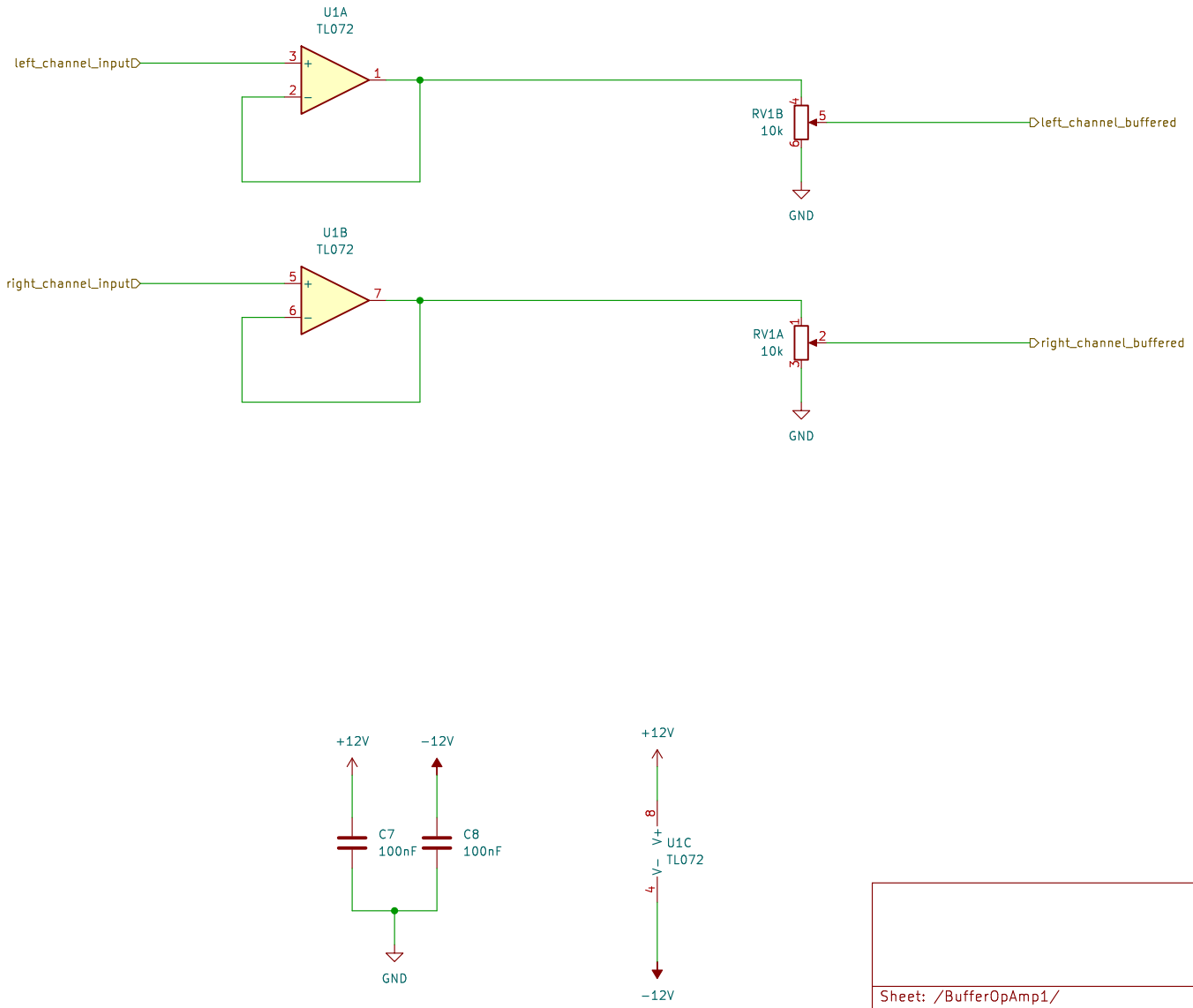

Sheet: /BufferOpAmp1/
File: BufferOpAmp.kicad_sch

Title:

Size: A4	Date:	**Rev:**
KiCad E.D.A. 8.0.1		Id: 3/6

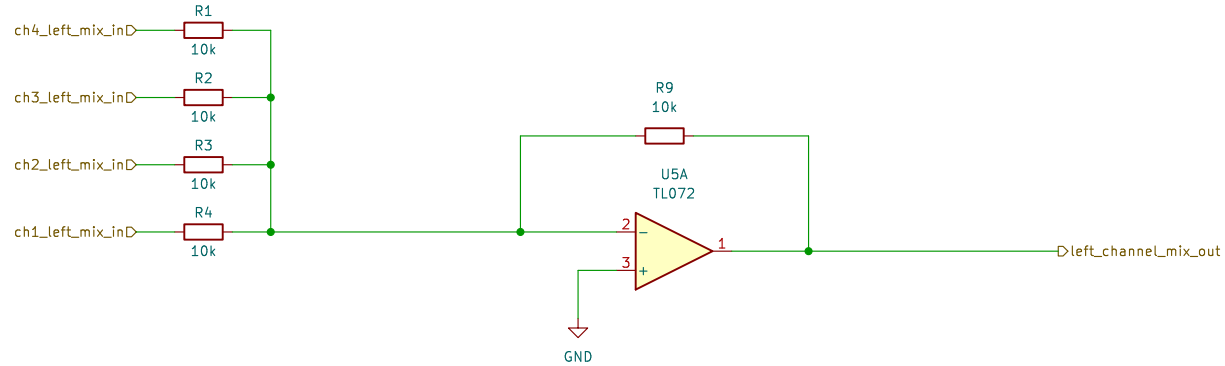

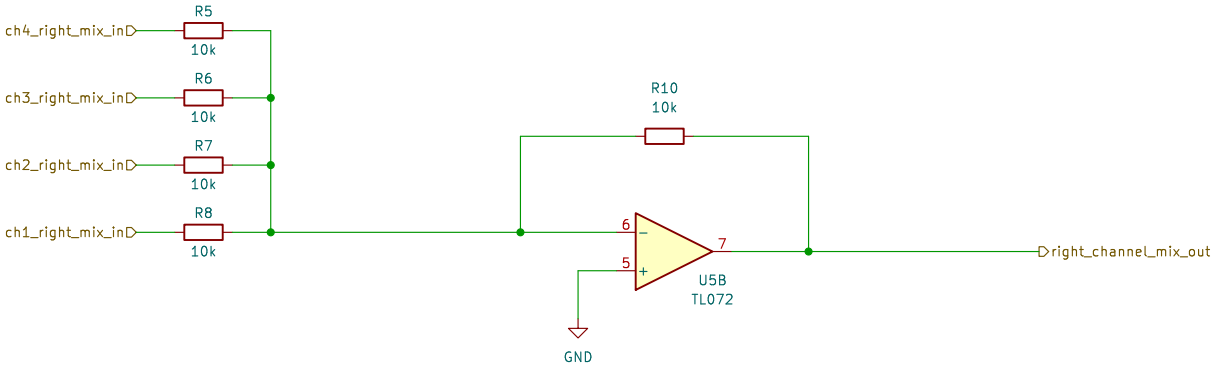

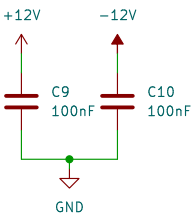

Sheet: /MixerOpAmp/
File: MixerOpAmp.kicad_sch

Title:

Size: A4	Date:	Rev:
KiCad E.D.A. 8.0.1		Id: 4/6

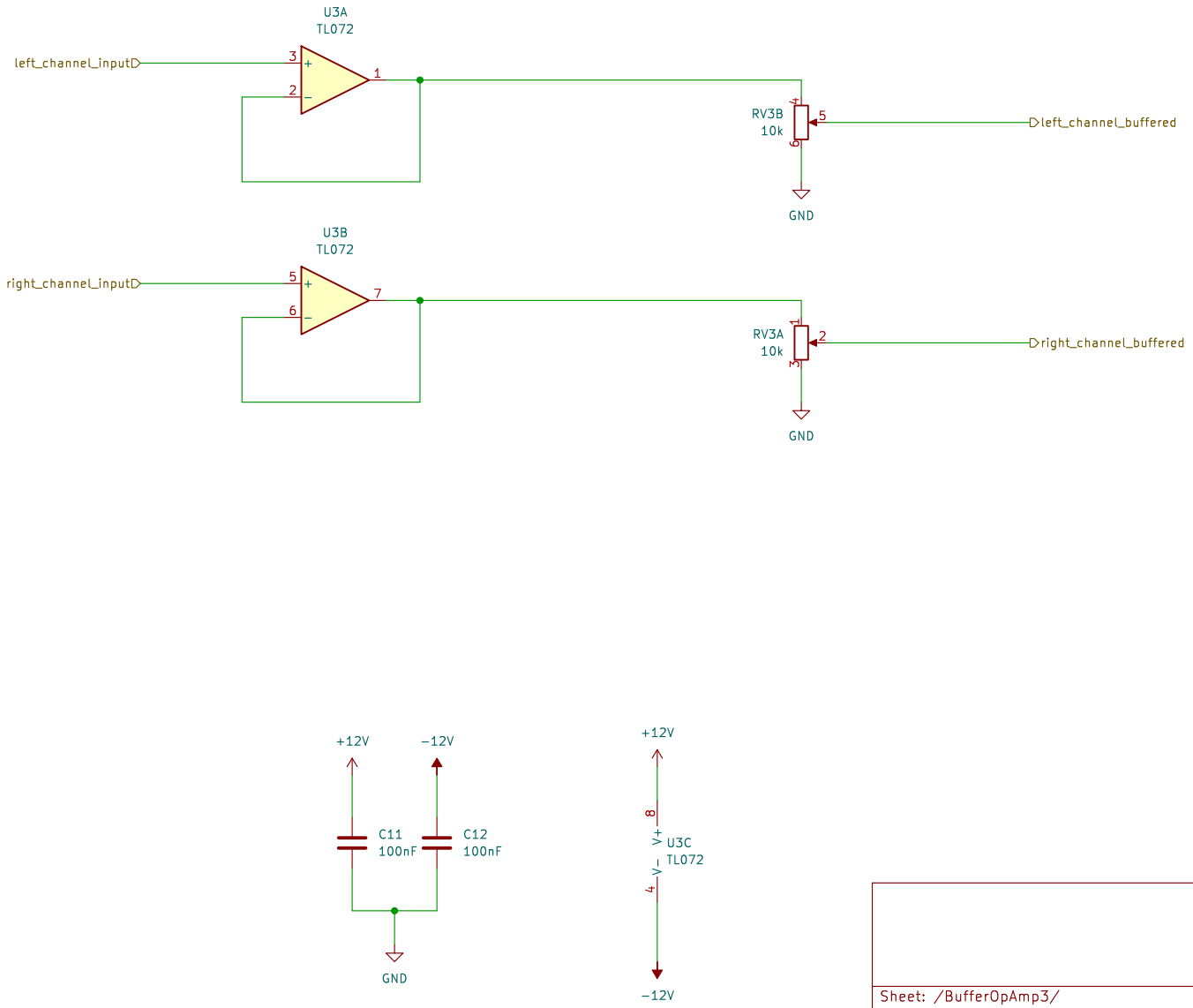

Sheet: /BufferOpAmp3/
File: BufferOpAmp.kicad_sch

Title:

Size: A4	Date:	**Rev:**
KiCad E.D.A. 8.0.1		Id: 5/6

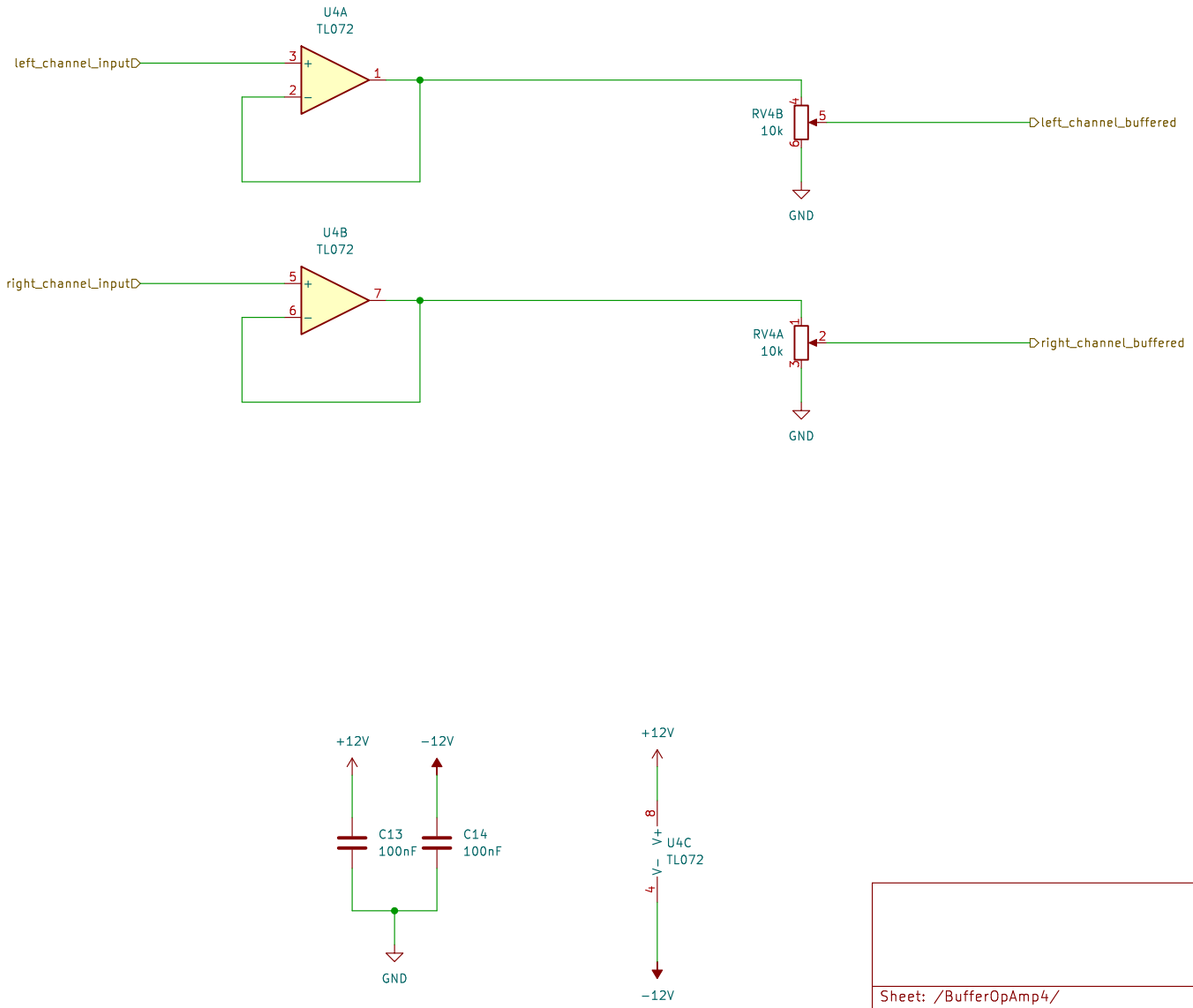

Sheet: /BufferOpAmp4/
File: BufferOpAmp.kicad_sch

Title:

Size: A4	Date:	**Rev:**
KiCad E.D.A. 8.0.1		Id: 6/6