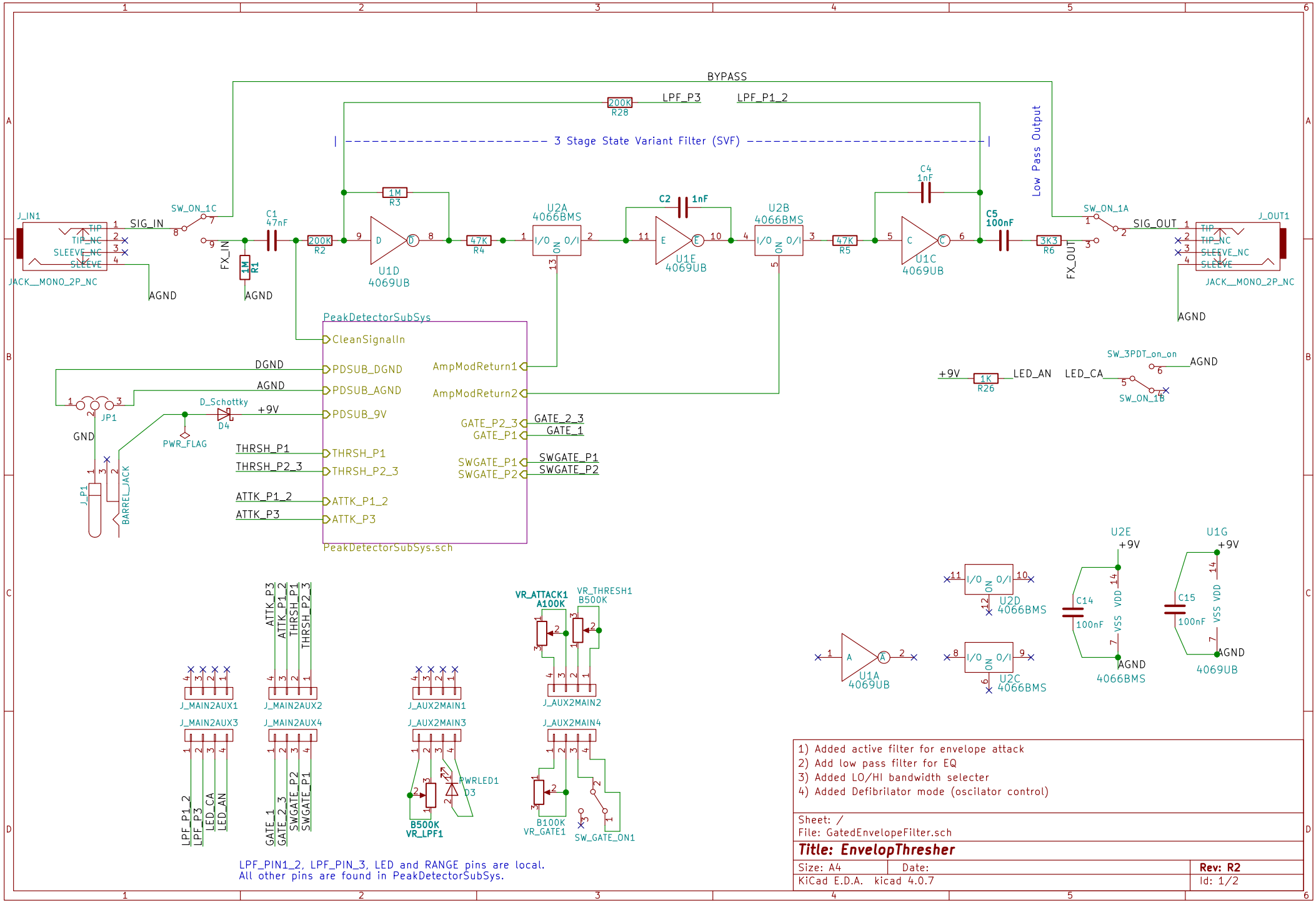

1) Added active filter for envelope attack
2) Add low pass filter for EQ
3) Added LO/HI bandwidth selecter
4) Added Defibrilator mode (oscilator control)

Sheet: /
File: GatedEnvelopeFilter.sch

Title: EnvelopThresher

Size: A4	Date:	Rev: R2
KiCad E.D.A. kicad 4.0.7		Id: 1/2

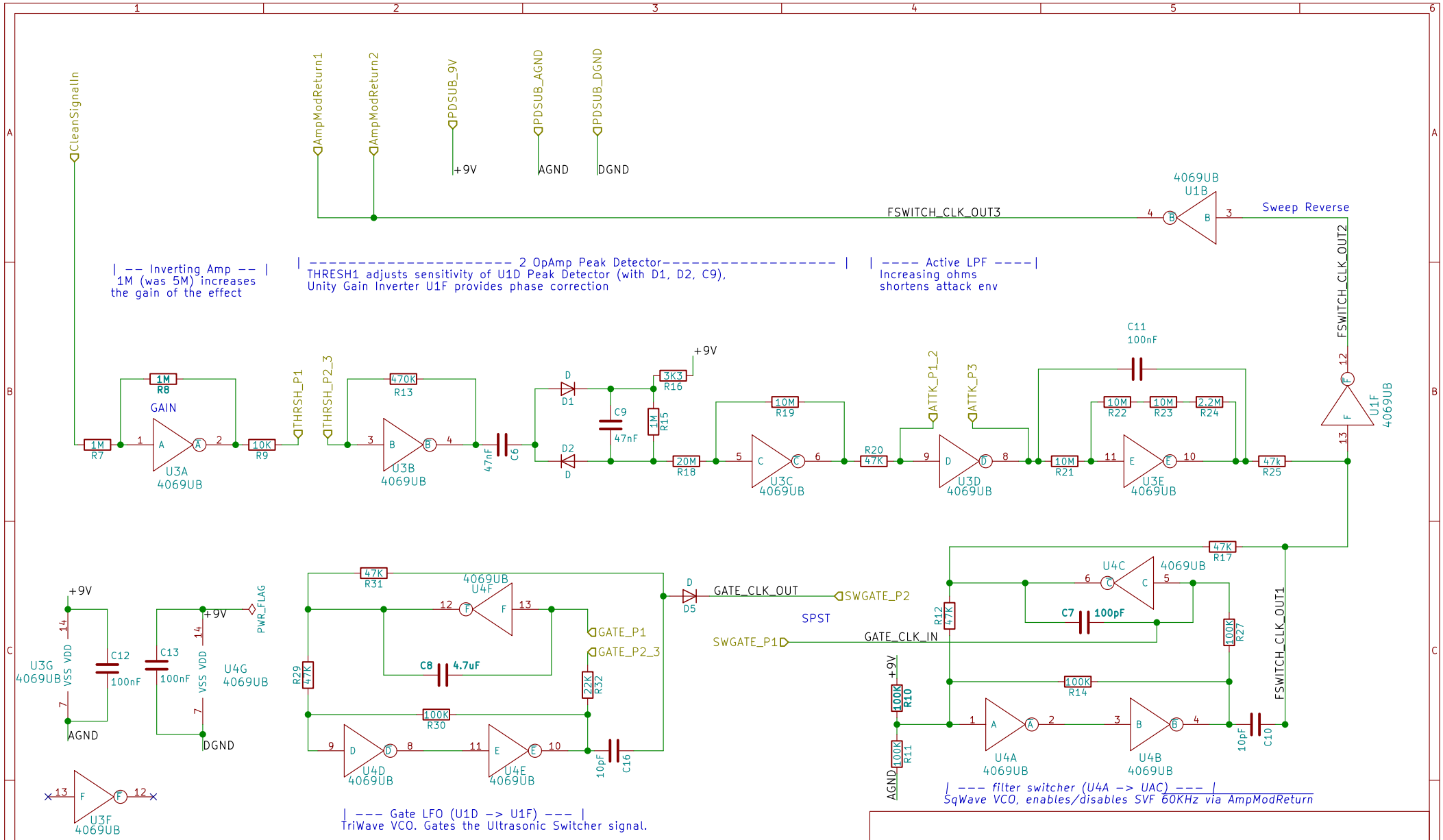

Sheet: /PeakDetectorSubSys/
File: PeakDetectorSubSys.sch

Title:

Size: A4	Date:	Rev:
KiCad E.D.A. kicad 4.0.7		Id: 2/2