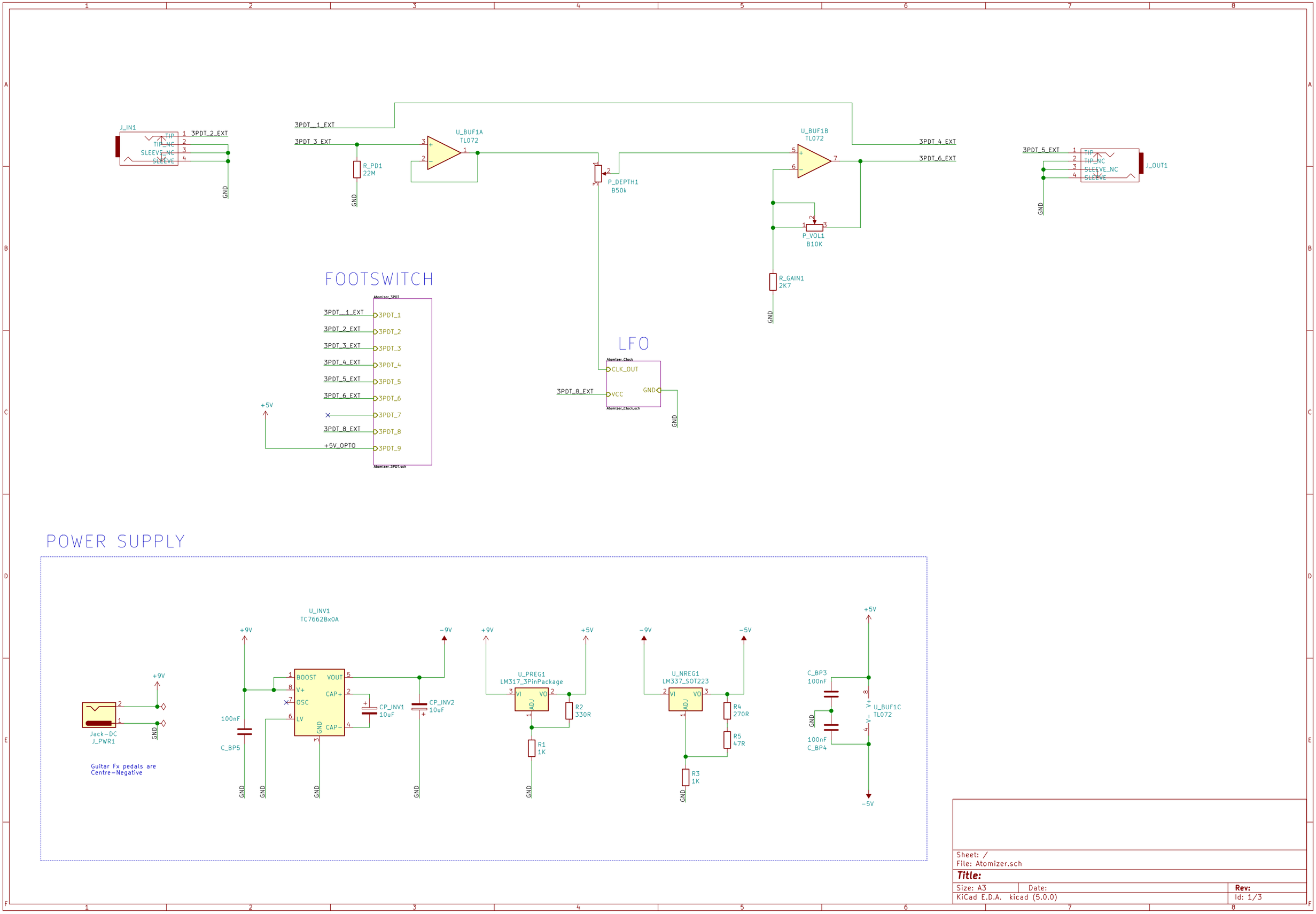

Sheet: /
File: Atomizer.sch

Title:

Size: A3	Date:	Rev:
KiCad E.D.A. kicad (5.0.0)		Id: 1/3

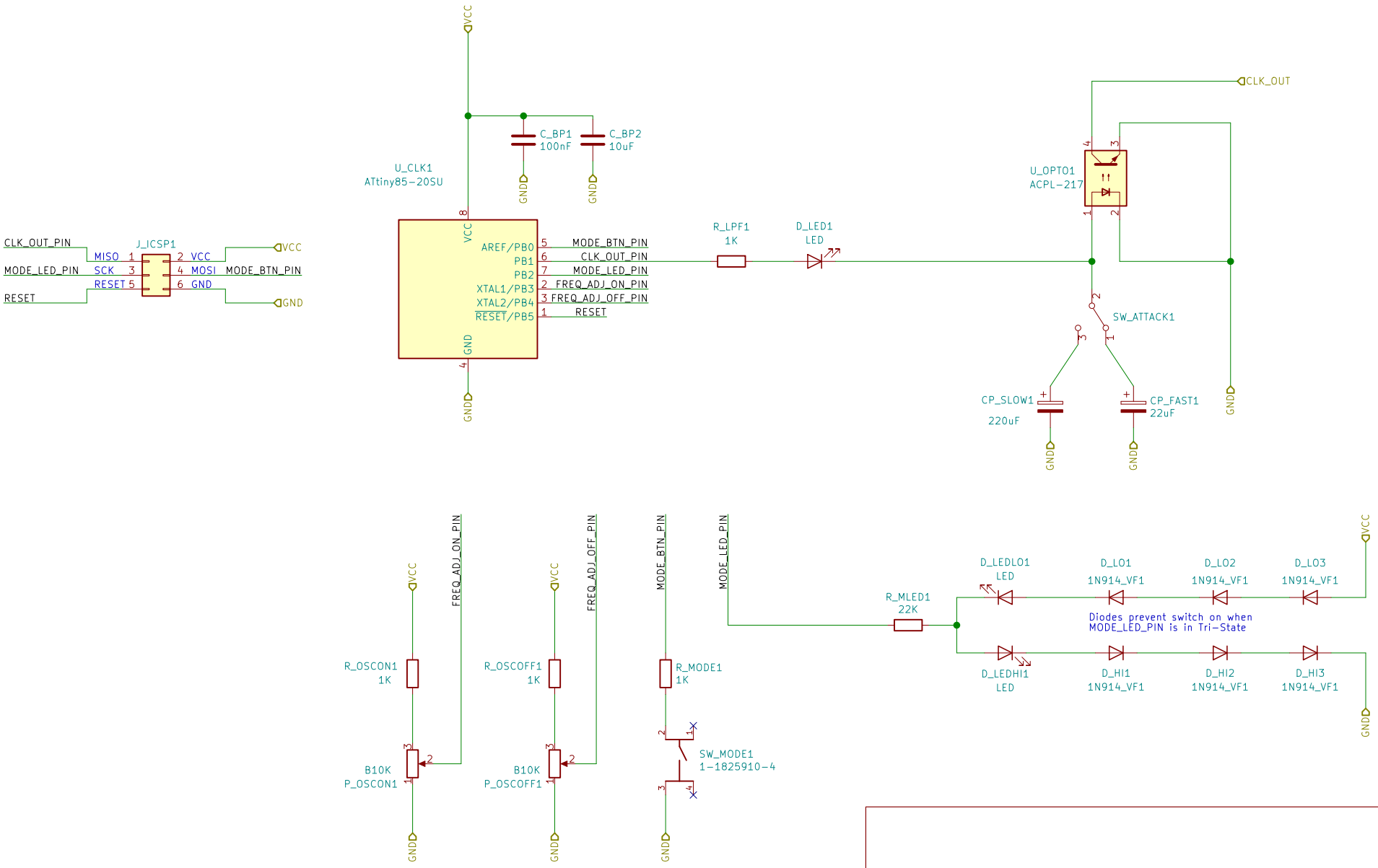

Sheet: /Atomizer_Clock/
File: Atomizer_Clock.sch

Title:

Size: A4	Date:	**Rev:**
KiCad E.D.A. kicad (5.0.0)		Id: 2/3

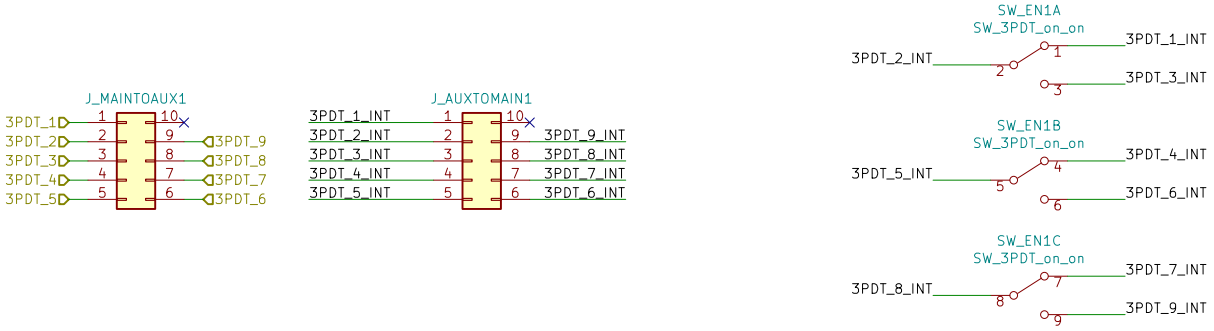

Sheet: /Atomizer_3PDT/
File: Atomizer_3PDT.sch

Title:

Size: A4	Date:	**Rev:**
KiCad E.D.A. kicad (5.0.0)		Id: 3/3