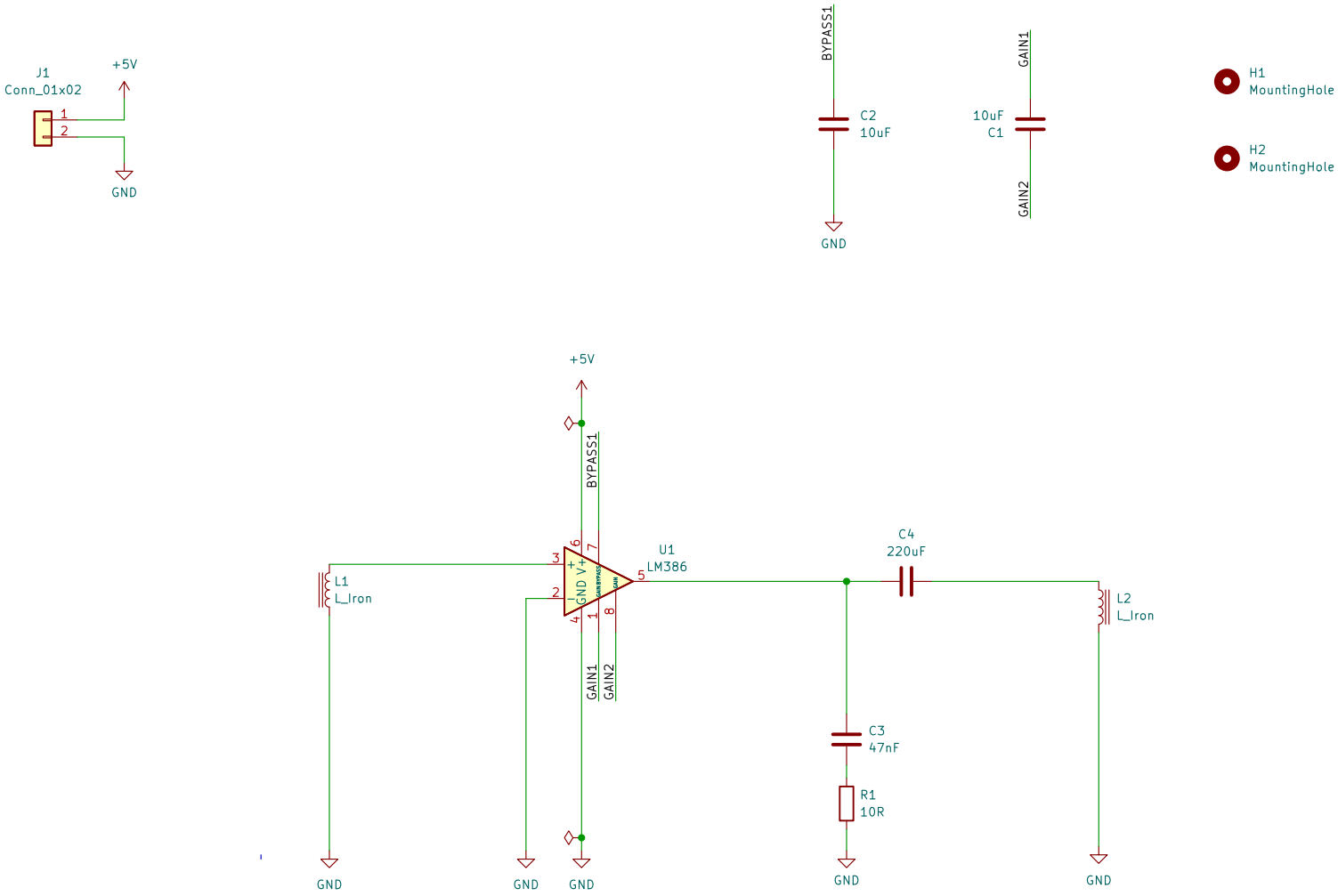

Sheet: /
File: Ebow.kicad_sch

Title: Sustainer

Size: A4	Date:	**Rev: A**
KiCad E.D.A. kicad (6.0.5-0)		Id: 1/1