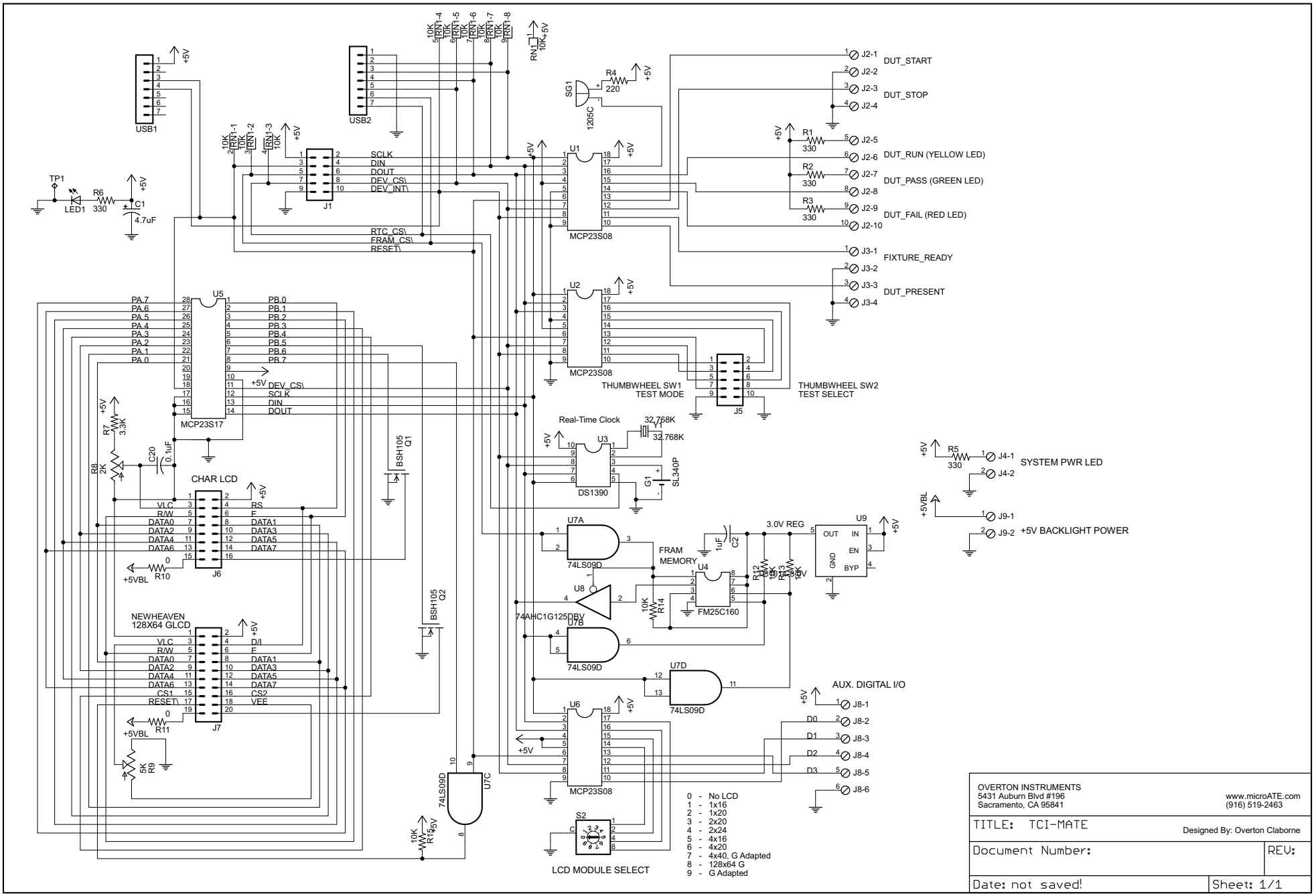
USB1
USB2
J1
SCLK
DIN
DOUT
DEV_CS\
DEV_INT\
RTC_CS\
FRAM_CS\
RESET\
TP1
LED1
R6 330
C1 4.7uF
U1
MCP23S08
U2
MCP23S08
U5
MCP23S17
PA.7
PA.6
PA.5
PA.4
PA.3
PA.2
PA.1
PA.0
PB.0
PB.1
PB.2
PB.3
PB.4
PB.5
PB.6
PB.7
SG1
1205C
R4 220
J2-1 DUT_START
J2-2
J2-3 DUT_STOP
J2-4
R1 330
J2-5
J2-6 DUT_RUN (YELLOW LED)
R2 330
J2-7 DUT_PASS (GREEN LED)
J2-8
R3 330
J2-9 DUT_FAIL (RED LED)
J2-10
J3-1 FIXTURE_READY
J3-2
J3-3 DUT_PRESENT
J3-4
THUMBWHEEL SW1
TEST MODE
THUMBWHEEL SW2
TEST SELECT
J5
Real-Time Clock
32.768K
U3
DS1390
G1 SL340P
R5 330
J4-1 SYSTEM PWR LED
J4-2
J9-1
J9-2 +5V BACKLIGHT POWER
CHAR LCD
J6
VLC
R/W
DATA0
DATA2
DATA4
DATA6
RS
E
DATA1
DATA3
DATA5
DATA7
R10 0
R7 3.3K
R8 2K
C20 0.1uF
BSH105 Q1
BSH105 Q2
NEWHEAVEN
128X64 GLCD
J7
D/I
CS1
RESET\
CS2
VEE
R11 0
R9 5K
U7A
74LS09D
FRAM
MEMORY
U4
FM25C160
U8
74AHC1G125DBV
U7B
74LS09D
U7D
74LS09D
U7C
74LS09D
R14 10K
R15 10K
3.0V REG
U9
OUT
IN
EN
GND
BYP
C2 1uF
R12 10K
R13 10K
U6
MCP23S08
AUX. DIGITAL I/O
J8-1
J8-2
J8-3
J8-4
J8-5
J8-6
D0
D1
D2
D3
S2
LCD MODULE SELECT
0 - No LCD
1 - 1x16
2 - 1x20
3 - 2x20
4 - 2x24
5 - 4x16
6 - 4x20
7 - 4x40, G Adapted
8 - 128x64 G
9 - G Adapted
OVERTON INSTRUMENTS
5431 Auburn Blvd #196
Sacramento, CA 95841
www.microATE.com
(916) 519-2463
TITLE: TCI-MATE
Designed By: Overton Claborne
Document Number:
REV:
Date: not saved!
Sheet: 1/1