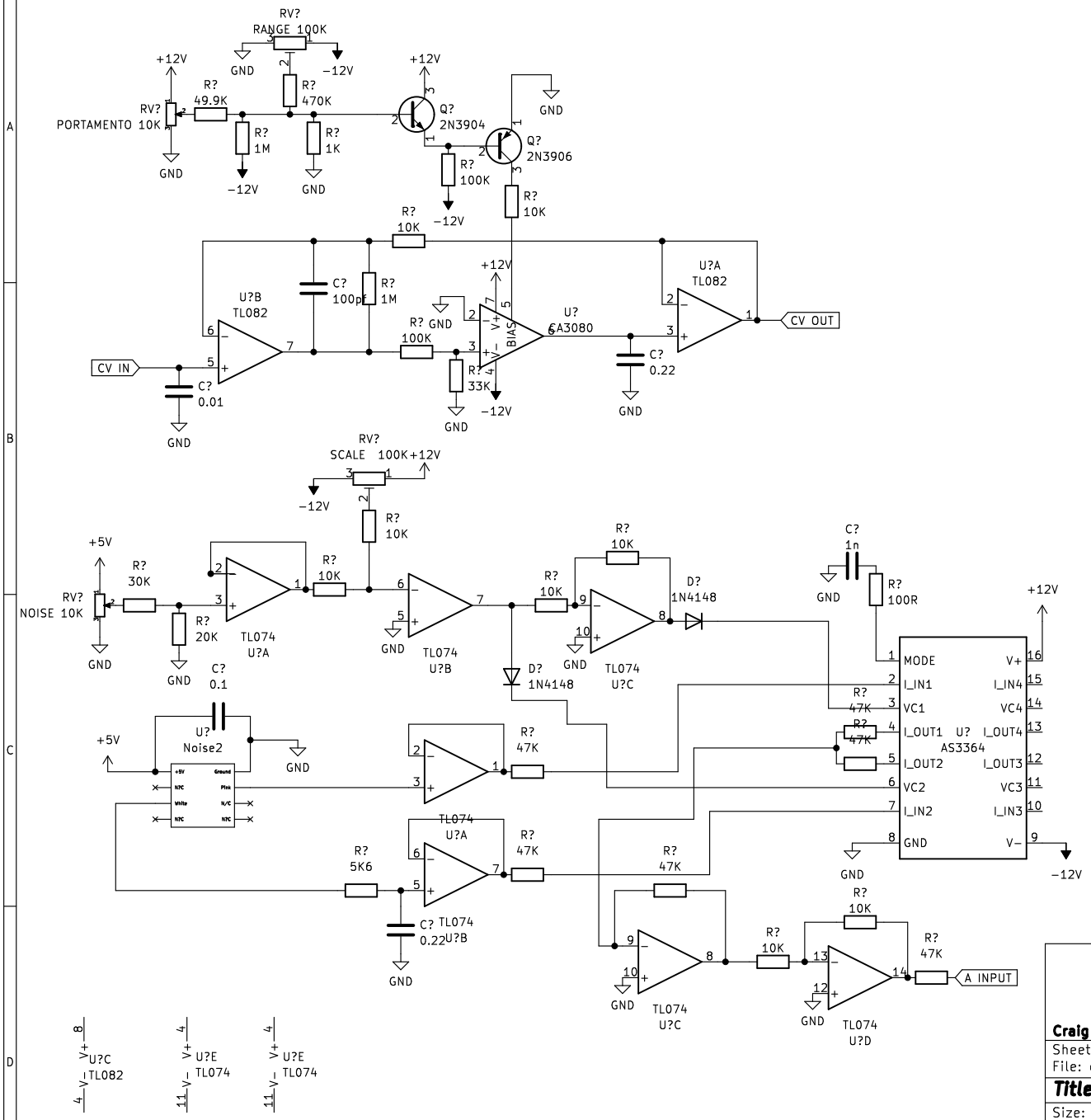

Craig Barnes

Sheet: /

File: control_circuits.kicad_sch

Title: Portamento, Noise

Size: A4	Date: 31/10/2022	**Rev:**
KiCad E.D.A. eeschema (6.0.7)		Id: 1/1