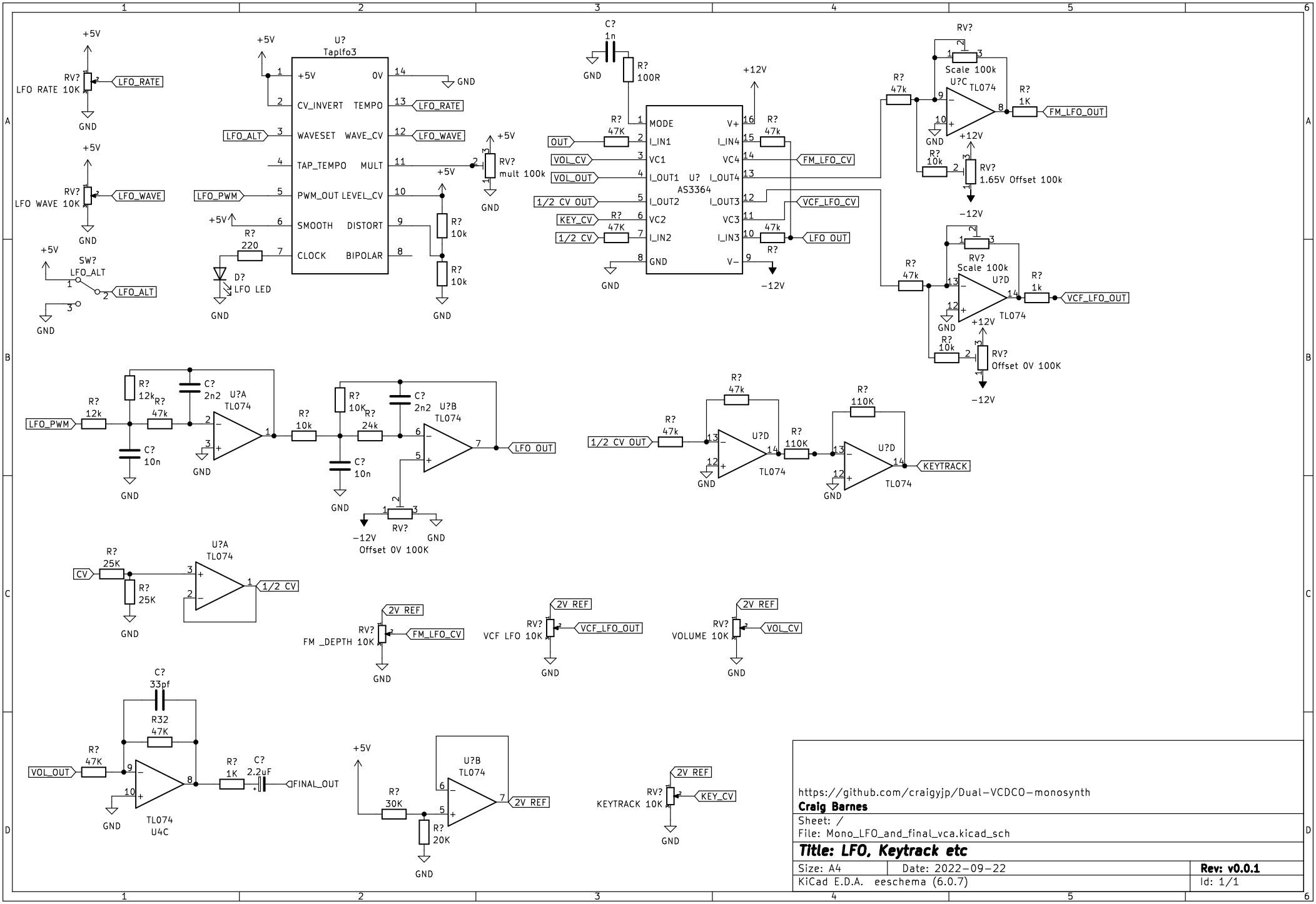

https://github.com/craigyjp/Dual-VCDCO-monosynth

Craig Barnes

Sheet: /

File: Mono_LFO_and_final_vca.kicad_sch

Title: LFO, Keytrack etc

Size: A4	Date: 2022-09-22	**Rev: v0.0.1**
KiCad E.D.A. eeschema (6.0.7)		Id: 1/1