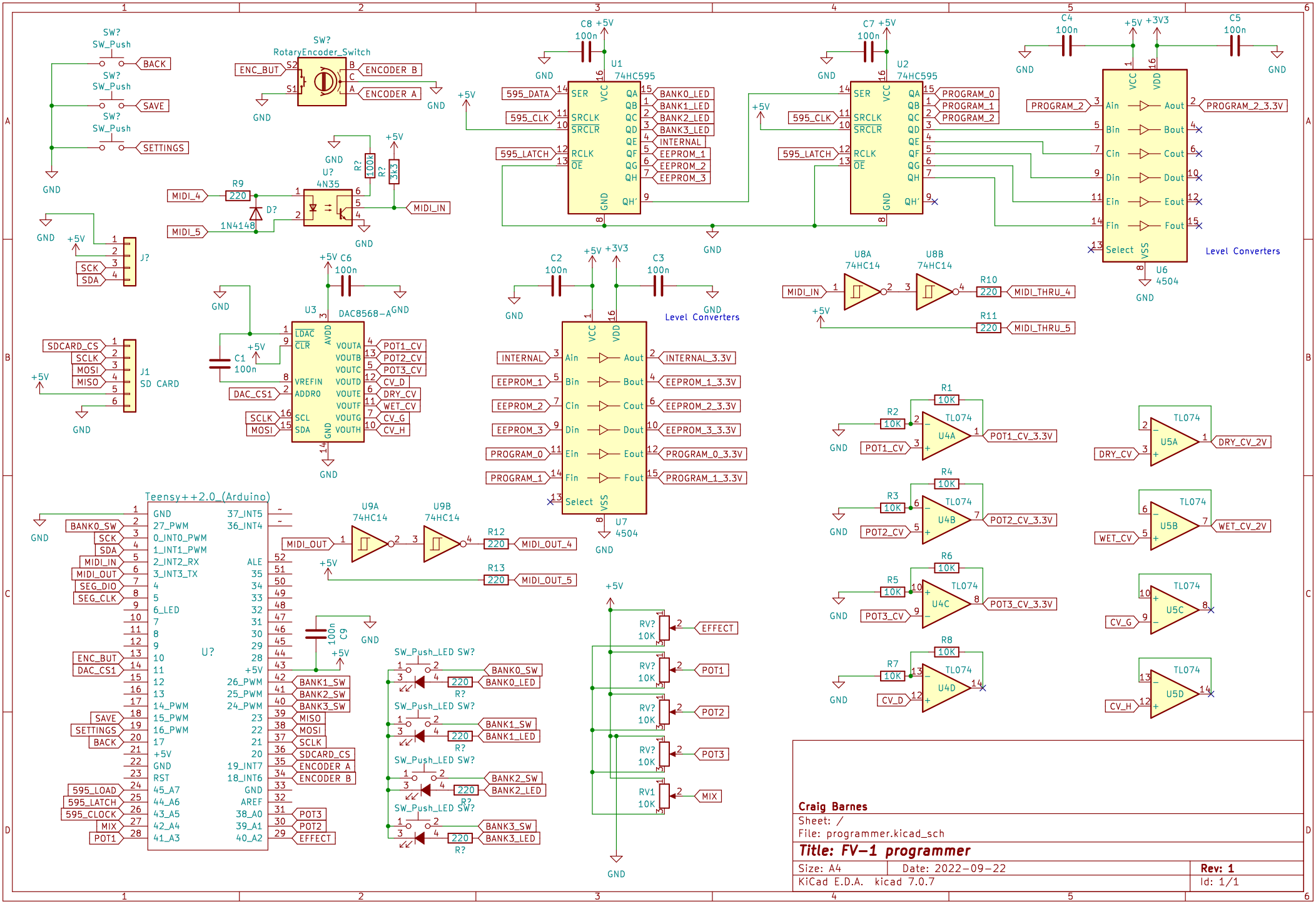
SW? SW_Push
BACK
SAVE
SETTINGS
SW? RotaryEncoder_Switch
ENC_BUT
ENCODER B
ENCODER A
U? 4N35
MIDI_4
MIDI_5
MIDI_IN
R9 220
D? 1N4148
R? 100k
R? 3k3
J?
SCK
SDA
J1 SD CARD
SDCARD_CS
SCLK
MOSI
MISO
U3 DAC8568-A
LDAC
CLR
AVDD
VREFIN
ADDR0
SCL
SDA
VOUTA
VOUTB
VOUTC
VOUTD
VOUTE
VOUTF
VOUTG
VOUTH
DAC_CS1
POT1_CV
POT2_CV
POT3_CV
CV_D
DRY_CV
WET_CV
CV_G
CV_H
C1 100n
C6 100n
U1 74HC595
C8 100n
595_DATA
595_CLK
595_LATCH
SER
SRCLK
SRCLR
RCLK
OE
QA
QB
QC
QD
QE
QF
QG
QH
QH'
BANK0_LED
BANK1_LED
BANK2_LED
BANK3_LED
INTERNAL
EEPROM_1
EEPROM_2
EEPROM_3
U2 74HC595
C7 100n
PROGRAM_0
PROGRAM_1
PROGRAM_2
C4 100n
C5 100n
+3V3
U6 4504
Level Converters
PROGRAM_2_3.3V
C2 100n
C3 100n
U7 4504
INTERNAL_3.3V
EEPROM_1_3.3V
EEPROM_2_3.3V
EEPROM_3_3.3V
PROGRAM_0_3.3V
PROGRAM_1_3.3V
U8A 74HC14
U8B 74HC14
R10 220
R11 220
MIDI_THRU_4
MIDI_THRU_5
Teensy++2.0_(Arduino)
U?
BANK0_SW
BANK1_SW
BANK2_SW
BANK3_SW
MIDI_OUT
SEG_DIO
SEG_CLK
ENC_BUT
DAC_CS1
595_LOAD
595_LATCH
595_CLOCK
MIX
POT1
POT2
POT3
EFFECT
U9A 74HC14
U9B 74HC14
R12 220
R13 220
MIDI_OUT_4
MIDI_OUT_5
C9 100n
SW_Push_LED SW?
BANK0_LED
BANK1_LED
BANK2_LED
BANK3_LED
RV? 10K
RV1 10K
R1 10K
R2 10K
R3 10K
R4 10K
R5 10K
R6 10K
R7 10K
R8 10K
TL074
U4A
U4B
U4C
U4D
U5A
U5B
U5C
U5D
POT1_CV_3.3V
POT2_CV_3.3V
POT3_CV_3.3V
DRY_CV_2V
WET_CV_2V
Craig Barnes
Sheet: /
File: programmer.kicad_sch
Title: FV-1 programmer
Size: A4
Date: 2022-09-22
Rev: 1
KiCad E.D.A. kicad 7.0.7
Id: 1/1