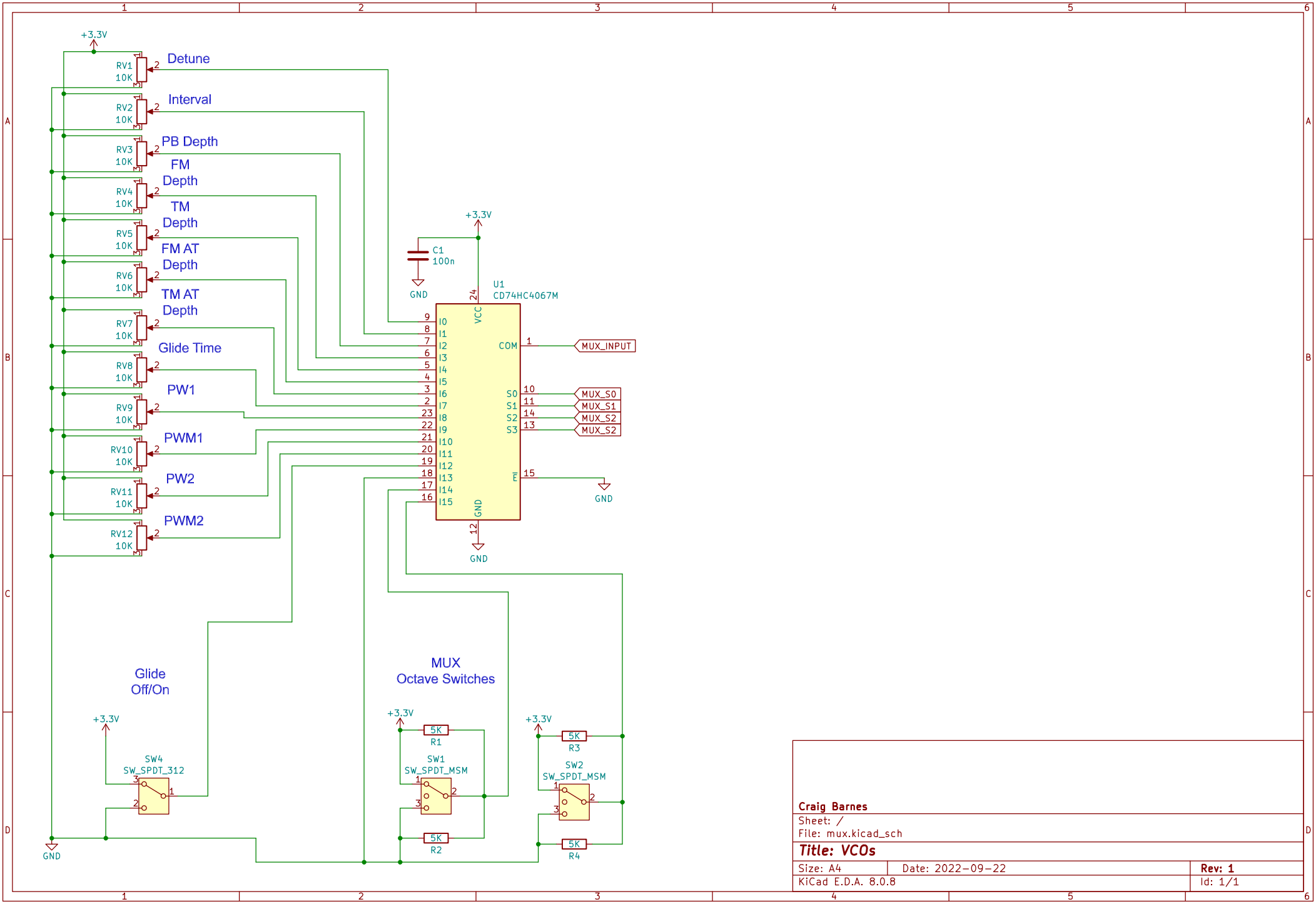

Craig Barnes

Sheet: /

File: mux.kicad_sch

Title: VCOs

Size: A4	Date: 2022-09-22	Rev: 1
KiCad E.D.A. 8.0.8		Id: 1/1