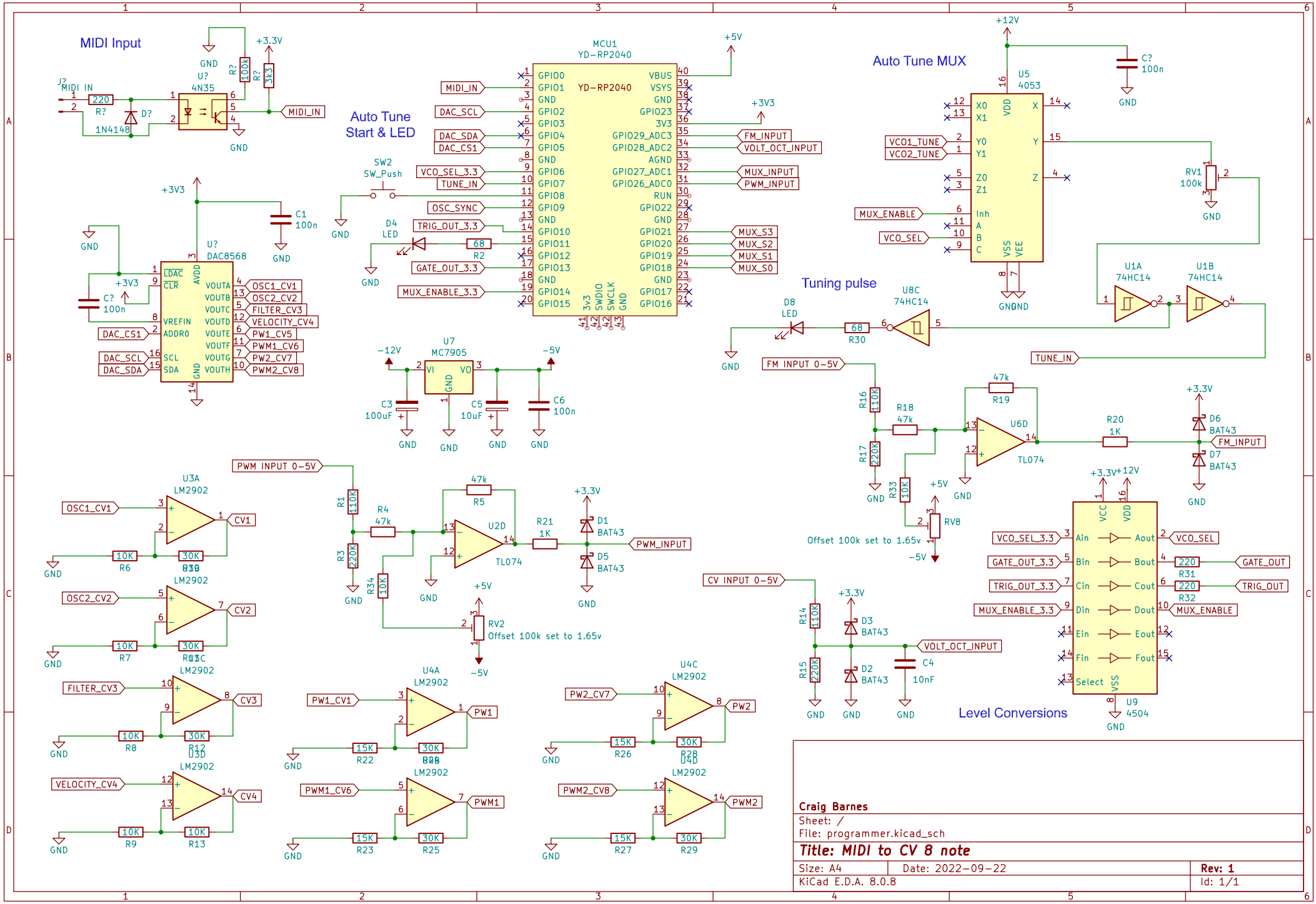
MIDI Input
Auto Tune Start & LED
Auto Tune MUX
Tuning pulse
Level Conversions
MCU1
YD-RP2040
U5
4053
U8C
74HC14
U1A
74HC14
U1B
74HC14
U?
DAC8568
U7
MC7905
U3A
LM2902
U2D
TL074
U6D
TL074
U9
4504
U4A
LM2902
U4C
LM2902
U3D
LM2902
U4D
LM2902
MIDI_IN
DAC_SCL
DAC_SDA
DAC_CS1
VCO_SEL_3.3
TUNE_IN
OSC_SYNC
TRIG_OUT_3.3
GATE_OUT_3.3
MUX_ENABLE_3.3
FM_INPUT
VOLT_OCT_INPUT
MUX_INPUT
PWM_INPUT
MUX_S3
MUX_S2
MUX_S1
MUX_S0
VCO1_TUNE
VCO2_TUNE
MUX_ENABLE
VCO_SEL
FM INPUT 0-5V
PWM INPUT 0-5V
CV INPUT 0-5V
Offset 100k set to 1.65v
OSC1_CV1
OSC2_CV2
FILTER_CV3
VELOCITY_CV4
PW1_CV5
PWM1_CV6
PW2_CV7
PWM2_CV8
GATE_OUT
TRIG_OUT
Craig Barnes
Sheet: /
File: programmer.kicad_sch
Title: MIDI to CV 8 note
Size: A4
Date: 2022-09-22
Rev: 1
KiCad E.D.A. 8.0.8
Id: 1/1