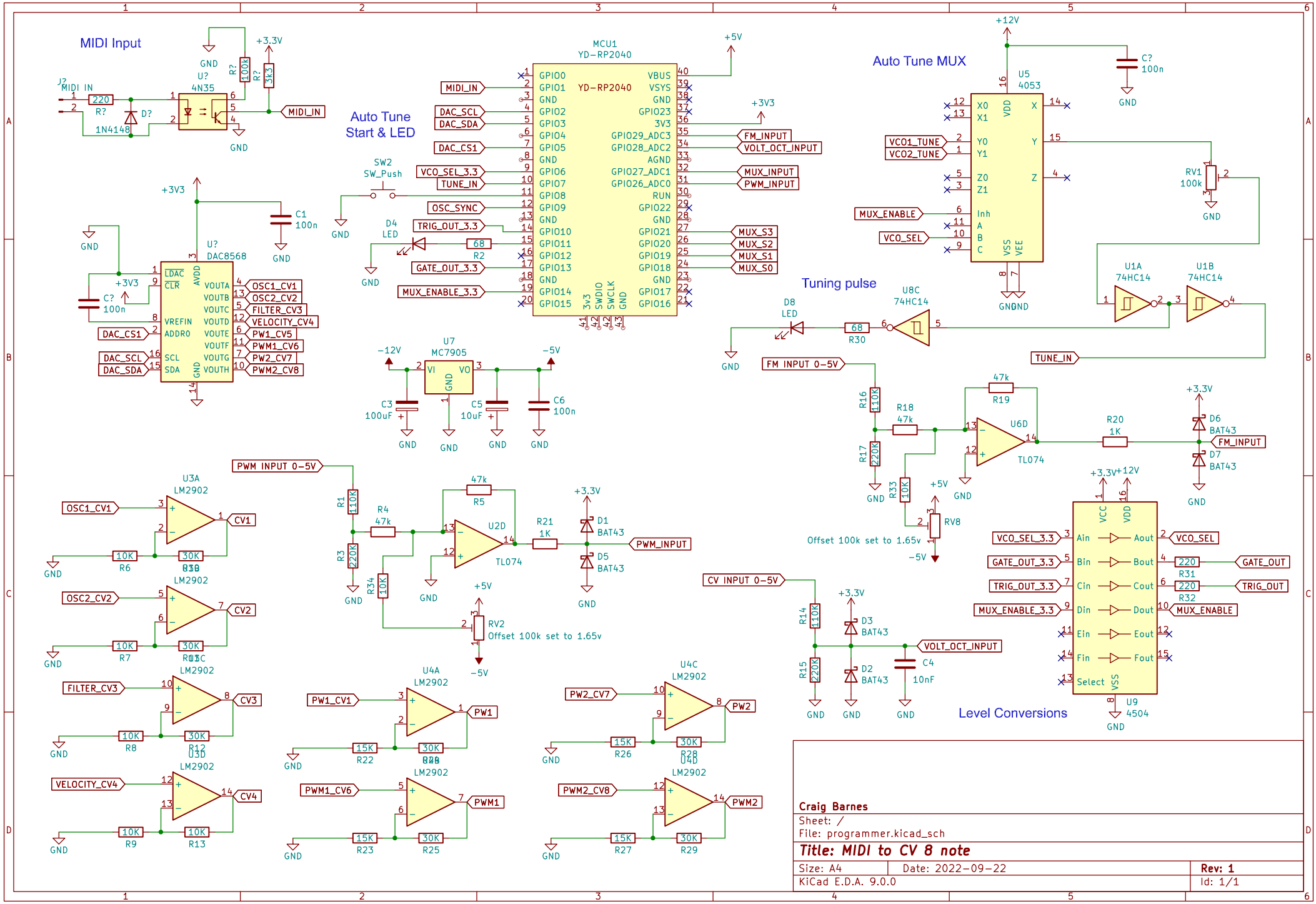
MIDI Input
Auto Tune Start & LED
Auto Tune MUX
Tuning pulse
Level Conversions
MCU1
YD-RP2040
U5
4053
U8C
74HC14
U1A
74HC14
U1B
74HC14
U?
DAC8568
U7
MC7905
U3A
LM2902
U2D
TL074
U6D
TL074
U9
4504
U4A
LM2902
U4C
LM2902
U3C
LM2902
U3D
LM2902
U4B
LM2902
U4D
LM2902
MIDI_IN
DAC_SCL
DAC_SDA
DAC_CS1
VCO_SEL_3.3
TUNE_IN
OSC_SYNC
TRIG_OUT_3.3
GATE_OUT_3.3
MUX_ENABLE_3.3
FM_INPUT
VOLT_OCT_INPUT
MUX_INPUT
PWM_INPUT
MUX_S3
MUX_S2
MUX_S1
MUX_S0
VCO1_TUNE
VCO2_TUNE
MUX_ENABLE
VCO_SEL
FM INPUT 0-5V
PWM INPUT 0-5V
CV INPUT 0-5V
OSC1_CV1
OSC2_CV2
FILTER_CV3
VELOCITY_CV4
PW1_CV5
PWM1_CV6
PW2_CV7
PWM2_CV8
CV1
CV2
CV3
CV4
PW1
PWM1
PW2
PWM2
GATE_OUT
TRIG_OUT
Offset 100k set to 1.65v
Offset 100k set to 1.65v
Craig Barnes
Sheet: /
File: programmer.kicad_sch
Title: MIDI to CV 8 note
Size: A4
Date: 2022-09-22
Rev: 1
KiCad E.D.A. 9.0.0
Id: 1/1