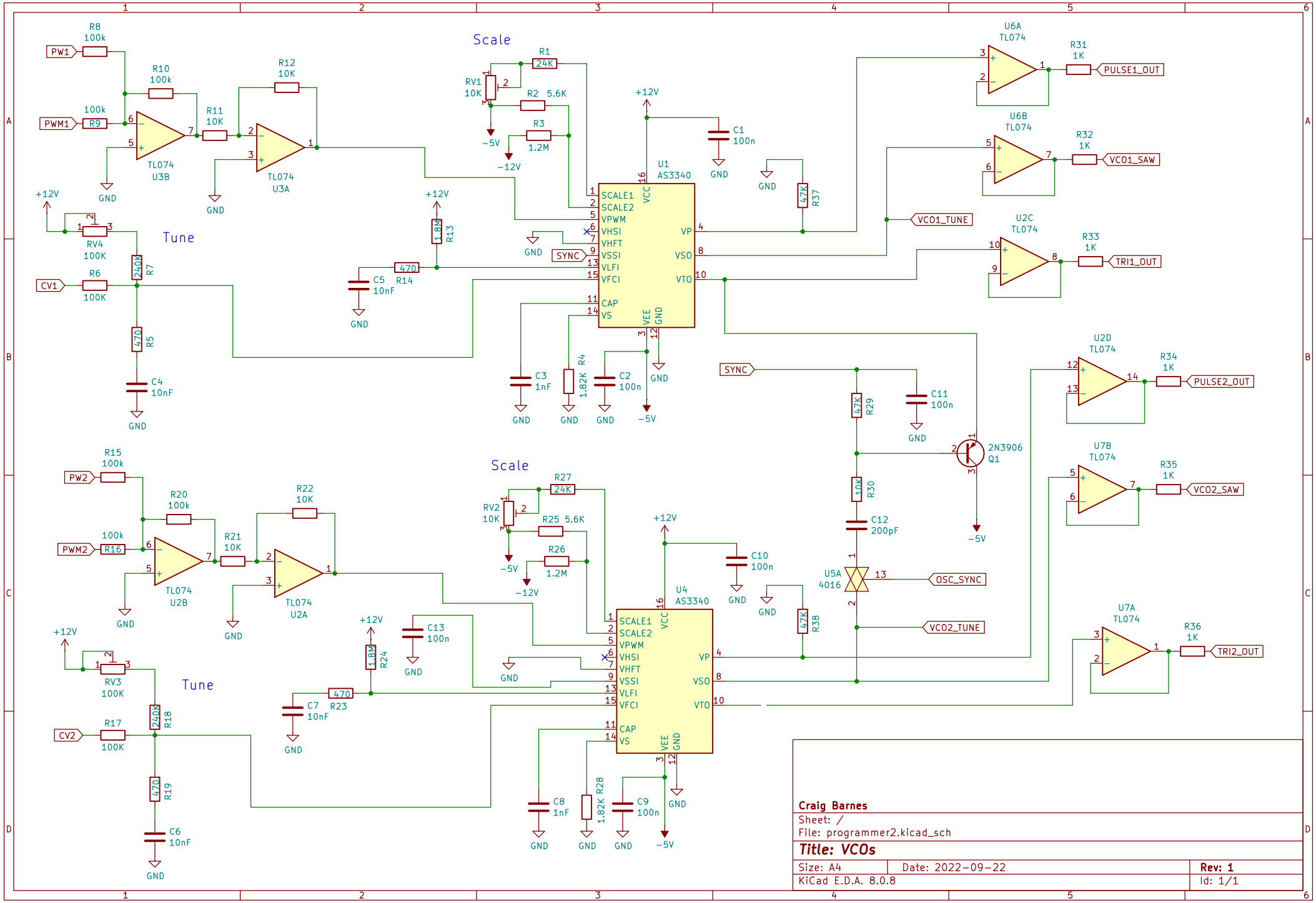
Scale
Tune
U1
AS3340
U4
AS3340
TL074
U3B
U3A
U2B
U2A
U6A
U6B
U2C
U2D
U7B
U7A
U5A
4016
2N3906
Q1
PW1
PWM1
CV1
PW2
PWM2
CV2
SYNC
OSC_SYNC
PULSE1_OUT
VCO1_SAW
VCO1_TUNE
TRI1_OUT
PULSE2_OUT
VCO2_SAW
VCO2_TUNE
TRI2_OUT
+12V
-12V
-5V
GND
Craig Barnes
Sheet: /
File: programmer2.kicad_sch
Title: VCOs
Size: A4
Date: 2022-09-22
Rev: 1
KiCad E.D.A. 8.0.8
Id: 1/1