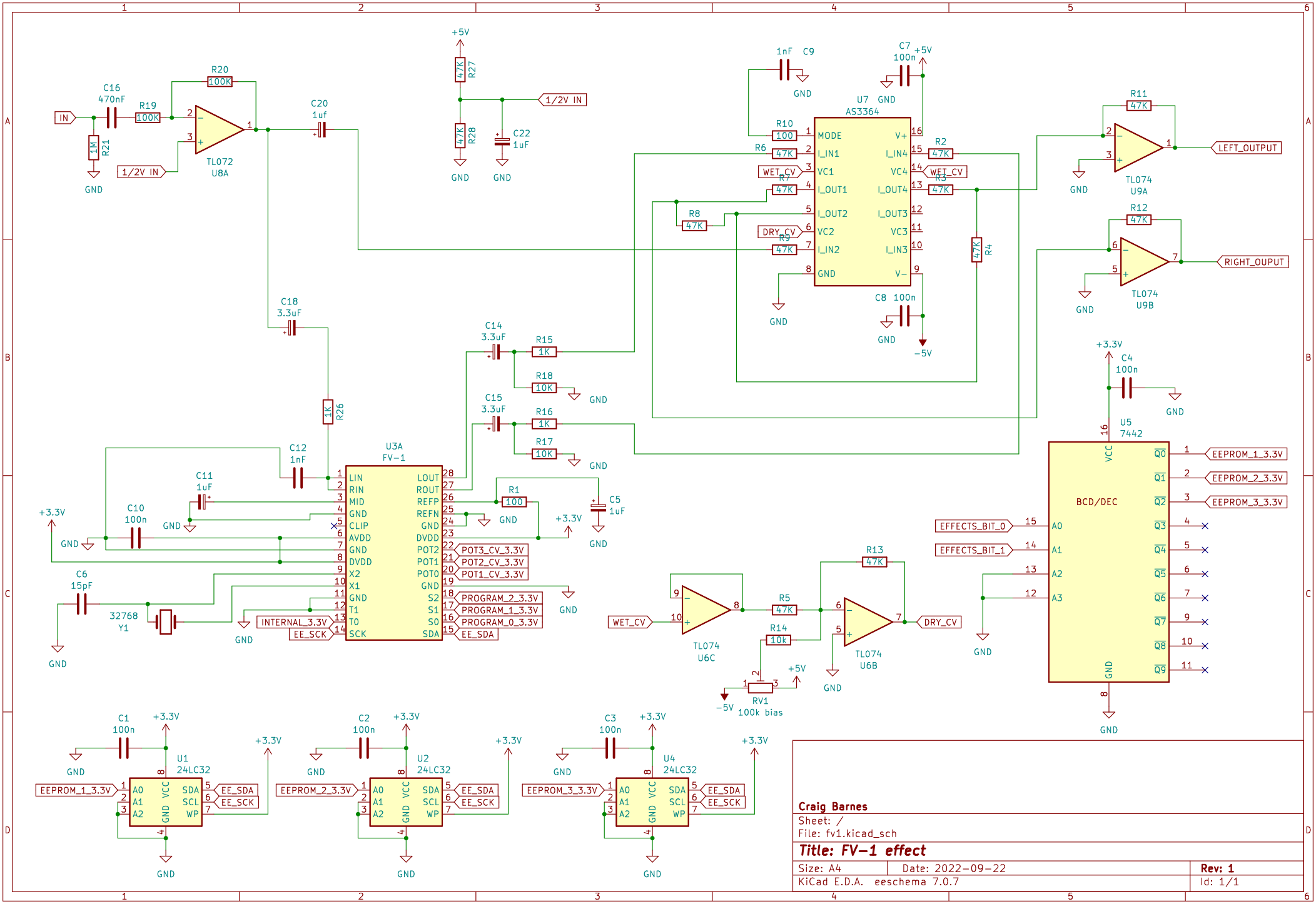
IN
C16 470nF
R19 100K
R20 100K
R21 1M
TL072 U8A
1/2V IN
C20 1uf
R27 47K
R28 47K
C22 1uF
1nF C9
C7 100n
U7 AS3364
MODE
I_IN1
VC1
I_OUT1
I_OUT2
VC2
I_IN2
GND
V+
I_IN4
VC4
I_OUT4
I_OUT3
VC3
I_IN3
V−
R10 100
R6 47K
R7 47K
R8 47K
R9 47K
R2 47K
R3 47K
R4 47K
WET_CV
DRY_CV
C8 100n
−5V
R11 47K
R12 47K
TL074 U9A
TL074 U9B
LEFT_OUTPUT
RIGHT_OUPUT
C18 3.3uF
R26 1K
C14 3.3uF
C15 3.3uF
R15 1K
R16 1K
R18 10K
R17 10K
C4 100n
+3.3V
U5 7442
BCD/DEC
EEPROM_1_3.3V
EEPROM_2_3.3V
EEPROM_3_3.3V
EFFECTS_BIT_0
EFFECTS_BIT_1
C12 1nF
C11 1uF
C10 100n
U3A FV−1
LIN
RIN
MID
CLIP
AVDD
DVDD
X2
X1
T1
T0
SCK
LOUT
ROUT
REFP
REFN
POT2
POT1
POT0
S2
S1
S0
SDA
POT3_CV_3.3V
POT2_CV_3.3V
POT1_CV_3.3V
PROGRAM_2_3.3V
PROGRAM_1_3.3V
PROGRAM_0_3.3V
EE_SDA
INTERNAL_3.3V
EE_SCK
R1 100
C5 1uF
C6 15pF
32768 Y1
TL074 U6C
TL074 U6B
R5 47K
R13 47K
R14 10k
RV1 100k bias
C1 100n
C2 100n
C3 100n
U1 24LC32
U2 24LC32
U4 24LC32
A0
A1
A2
VCC
SDA
SCL
WP
Craig Barnes
Sheet: /
File: fv1.kicad_sch
Title: FV−1 effect
Size: A4
Date: 2022−09−22
Rev: 1
KiCad E.D.A. eeschema 7.0.7
Id: 1/1