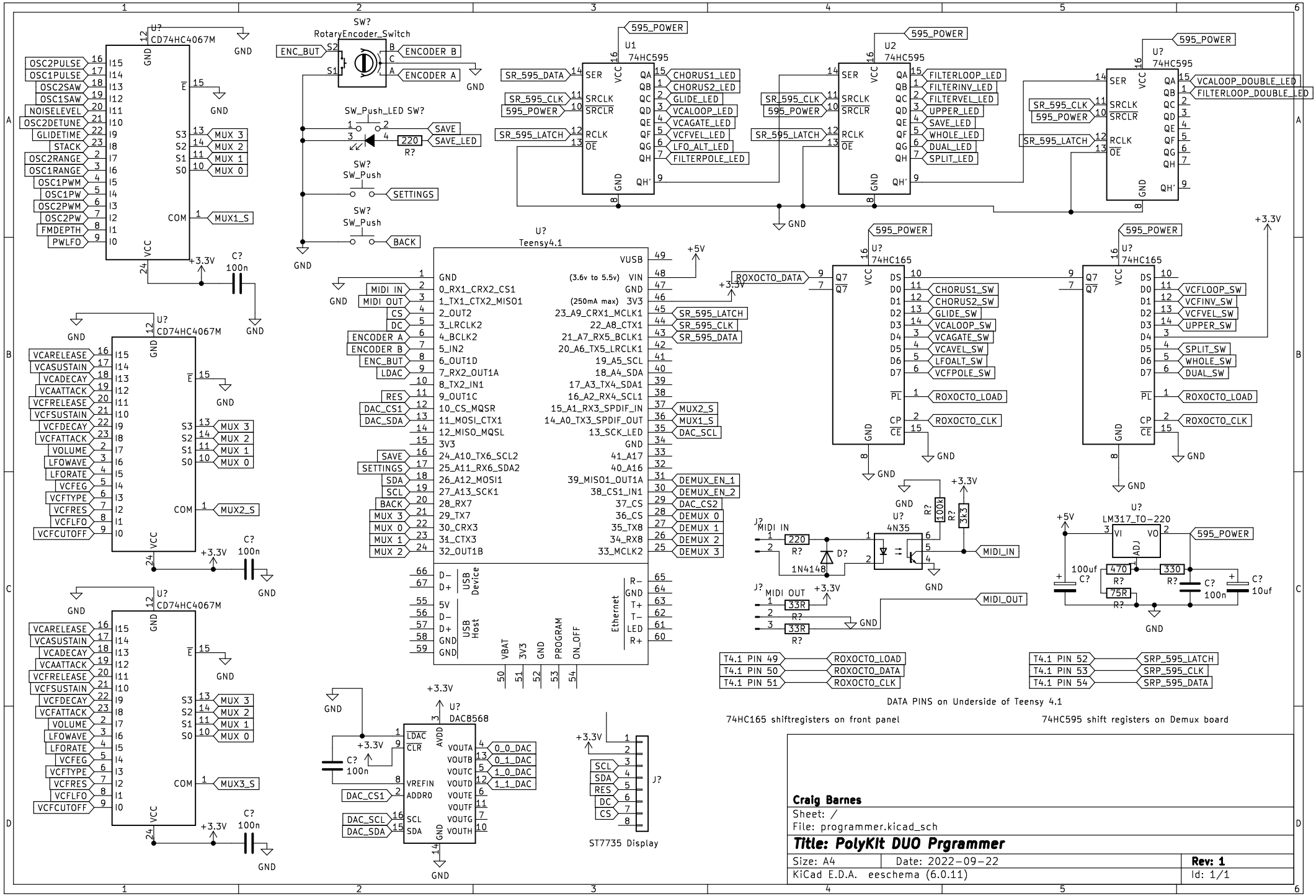
U? CD74HC4067M
OSC2PULSE
OSC1PULSE
OSC2SAW
OSC1SAW
NOISELEVEL
OSC2DETUNE
GLIDETIME
STACK
OSC2RANGE
OSC1RANGE
OSC1PWM
OSC1PW
OSC2PWM
OSC2PW
FMDEPTH
PWLFO
MUX 3
MUX 2
MUX 1
MUX 0
MUX1_S
SW? RotaryEncoder_Switch
ENC_BUT
ENCODER B
ENCODER A
SW_Push_LED SW?
SAVE
SAVE_LED
220
R?
SW? SW_Push
SETTINGS
BACK
U1 74HC595
U2 74HC595
U? 74HC595
595_POWER
SR_595_DATA
SR_595_CLK
SR_595_LATCH
CHORUS1_LED
CHORUS2_LED
GLIDE_LED
VCALOOP_LED
VCAGATE_LED
VCFVEL_LED
LFO_ALT_LED
FILTERPOLE_LED
FILTERLOOP_LED
FILTERINV_LED
FILTERVEL_LED
UPPER_LED
SAVE_LED
WHOLE_LED
DUAL_LED
SPLIT_LED
VCALOOP_DOUBLE_LED
FILTERLOOP_DOUBLE_LED
U? Teensy4.1
MIDI IN
MIDI OUT
CS
DC
ENCODER A
ENCODER B
ENC_BUT
LDAC
RES
DAC_CS1
DAC_SDA
SAVE
SETTINGS
SDA
SCL
BACK
MUX 3
MUX 0
MUX 1
MUX 2
MUX2_S
DAC_SCL
DEMUX_EN_1
DEMUX_EN_2
DAC_CS2
DEMUX 0
DEMUX 1
DEMUX 2
DEMUX 3
USB Device
USB Host
Ethernet
VBAT
3V3
PROGRAM
ON_OFF
U? 74HC165
ROXOCTO_DATA
ROXOCTO_LOAD
ROXOCTO_CLK
CHORUS1_SW
CHORUS2_SW
GLIDE_SW
VCALOOP_SW
VCAGATE_SW
VCAVEL_SW
LFOALT_SW
VCFPOLE_SW
VCFLOOP_SW
VCFINV_SW
VCFVEL_SW
UPPER_SW
SPLIT_SW
WHOLE_SW
DUAL_SW
U? 4N35
MIDI_IN
MIDI_OUT
1N4148
U? LM317_TO-220
U? DAC8568
0_0_DAC
0_1_DAC
1_0_DAC
1_1_DAC
ST7735 Display
T4.1 PIN 49
T4.1 PIN 50
T4.1 PIN 51
T4.1 PIN 52
T4.1 PIN 53
T4.1 PIN 54
SRP_595_LATCH
SRP_595_CLK
SRP_595_DATA
DATA PINS on Underside of Teensy 4.1
74HC165 shiftregisters on front panel
74HC595 shift registers on Demux board
Craig Barnes
Sheet: /
File: programmer.kicad_sch
Title: PolyKit DUO Prgrammer
Size: A4
Date: 2022-09-22
Rev: 1
KiCad E.D.A. eeschema (6.0.11)
Id: 1/1