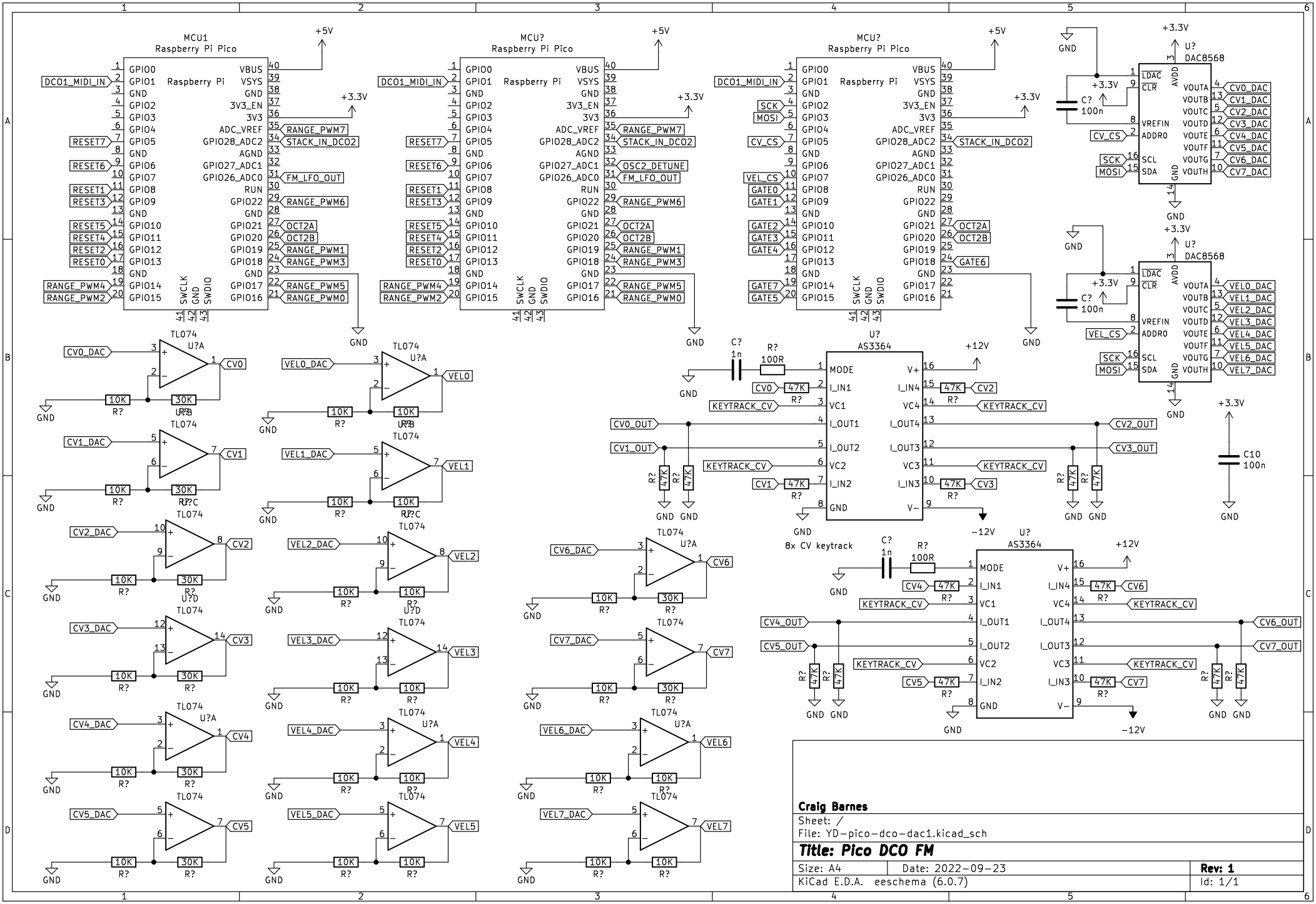
MCU1
Raspberry Pi Pico
MCU?
Raspberry Pi Pico
MCU?
Raspberry Pi Pico
Raspberry Pi
+5V
+3.3V
DCO1_MIDI_IN
RESET7
RESET6
RESET1
RESET3
RESET5
RESET4
RESET2
RESET0
RANGE_PWM4
RANGE_PWM2
RANGE_PWM7
STACK_IN_DCO2
FM_LFO_OUT
RANGE_PWM6
OCT2A
OCT2B
RANGE_PWM1
RANGE_PWM3
RANGE_PWM5
RANGE_PWM0
OSC2_DETUNE
SCK
MOSI
CV_CS
VEL_CS
GATE0
GATE1
GATE2
GATE3
GATE4
GATE7
GATE5
GATE6
SWCLK
SWDIO
GND
U?
DAC8568
LDAC
CLR
AVDD
VREFIN
ADDR0
SCL
SDA
VOUTA
VOUTB
VOUTC
VOUTD
VOUTE
VOUTF
VOUTG
VOUTH
CV0_DAC
CV1_DAC
CV2_DAC
CV3_DAC
CV4_DAC
CV5_DAC
CV6_DAC
CV7_DAC
VEL0_DAC
VEL1_DAC
VEL2_DAC
VEL3_DAC
VEL4_DAC
VEL5_DAC
VEL6_DAC
VEL7_DAC
C?
100n
C10
100n
TL074
U?A
U?B
U?C
U?D
10K
30K
R?
U?
AS3364
MODE
I_IN1
VC1
I_OUT1
I_OUT2
VC2
I_IN2
I_IN4
VC4
I_OUT4
I_OUT3
VC3
I_IN3
V+
V−
+12V
−12V
C?
1n
R?
100R
47K
KEYTRACK_CV
CV0_OUT
CV1_OUT
CV2_OUT
CV3_OUT
CV4_OUT
CV5_OUT
CV6_OUT
CV7_OUT
8x CV keytrack
Craig Barnes
Sheet: /
File: YD−pico−dco−dac1.kicad_sch
Title: Pico DCO FM
Size: A4
Date: 2022−09−23
Rev: 1
KiCad E.D.A. eeschema (6.0.7)
Id: 1/1