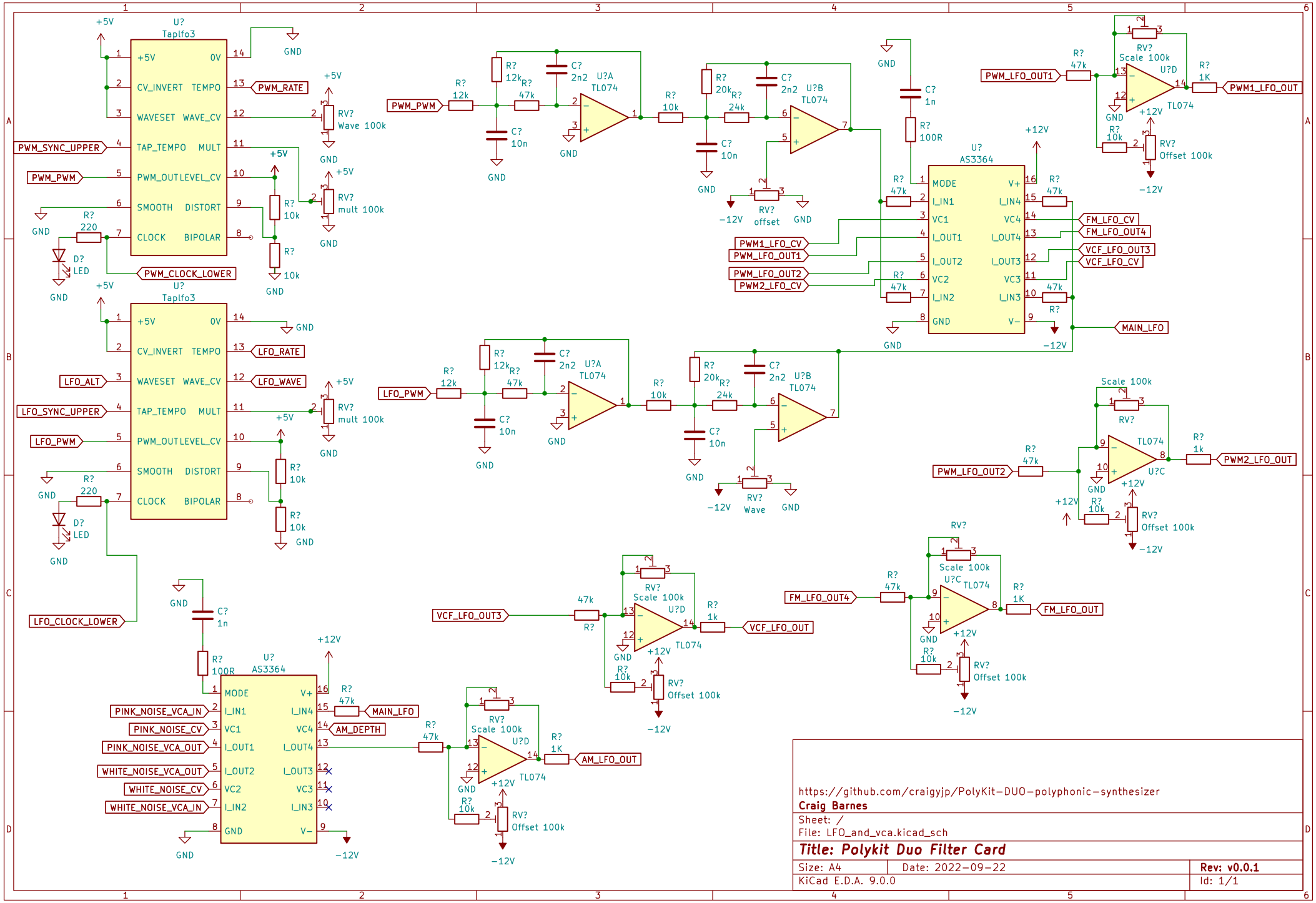

https://github.com/craigyjp/PolyKit-DUO-polyphonic-synthesizer

Craig Barnes

Sheet: /

File: LFO_and_vca.kicad_sch

Title: Polykit Duo Filter Card

Size: A4	Date: 2022-09-22	**Rev: v0.0.1**
KiCad E.D.A. 9.0.0		Id: 1/1