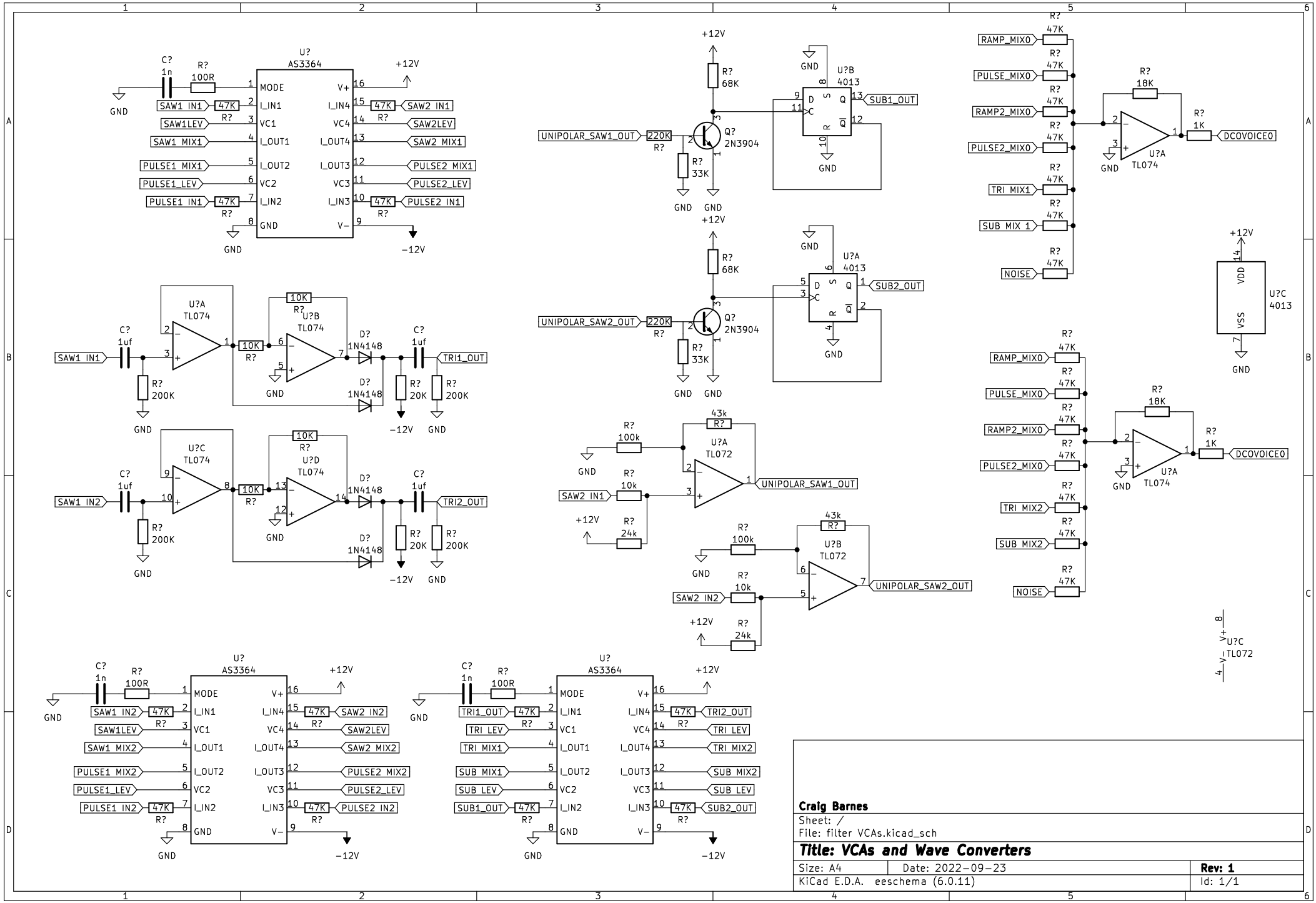

Craig Barnes

Sheet: /

File: filter VCAs.kicad_sch

Title: VCAs and Wave Converters

Size: A4	Date: 2022-09-23	**Rev: 1**
KiCad E.D.A. eeschema (6.0.11)		Id: 1/1