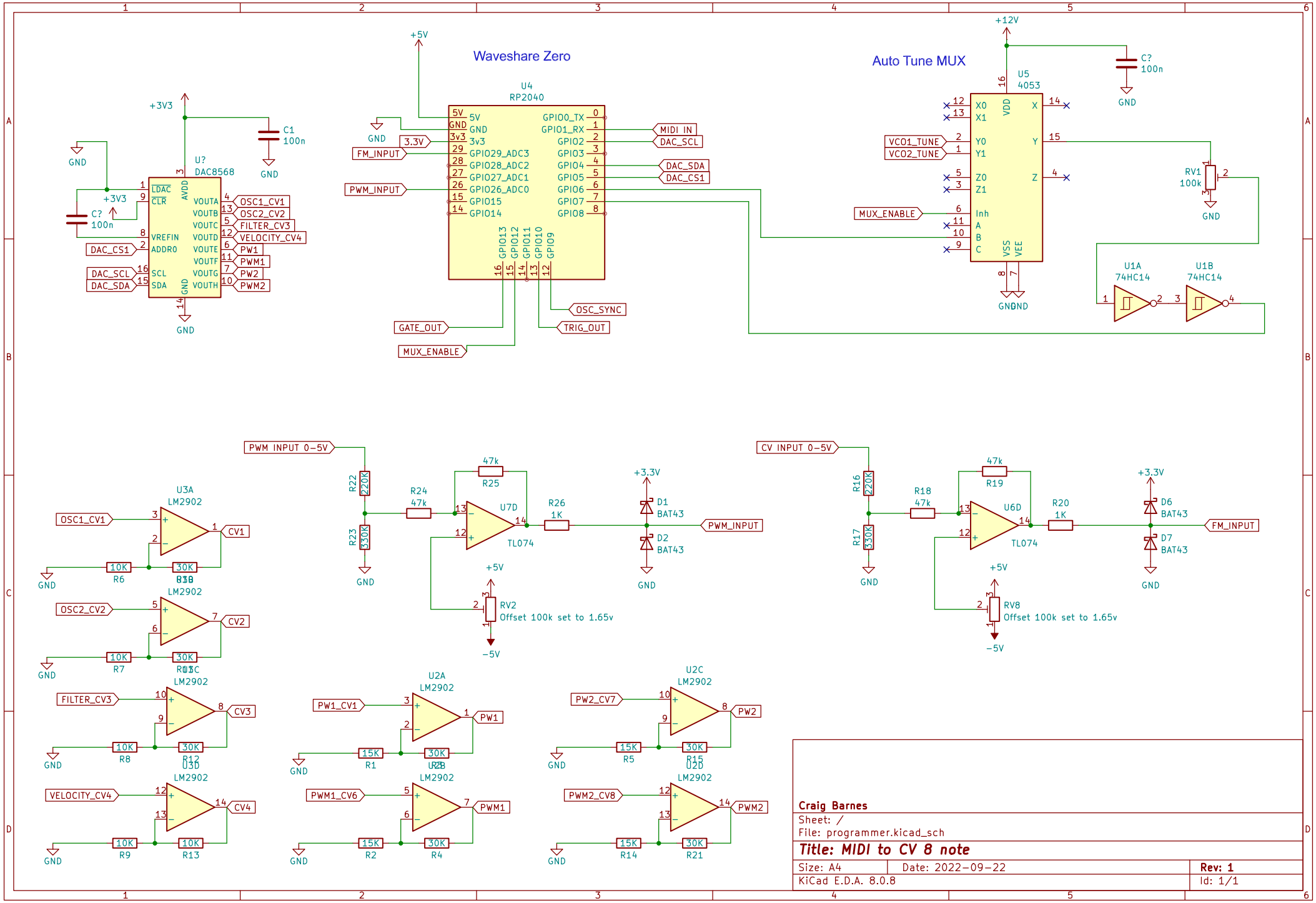
Waveshare Zero
Auto Tune MUX
U4
RP2040
U5
4053
U?
DAC8568
C1
100n
C?
100n
+3V3
+5V
+12V
GND
MIDI IN
DAC_SCL
DAC_SDA
DAC_CS1
FM_INPUT
PWM_INPUT
OSC_SYNC
TRIG_OUT
GATE_OUT
MUX_ENABLE
VCO1_TUNE
VCO2_TUNE
RV1
100k
U1A
74HC14
U1B
74HC14
OSC1_CV1
OSC2_CV2
FILTER_CV3
VELOCITY_CV4
PW1
PWM1
PW2
PWM2
CV1
CV2
CV3
CV4
PW1_CV1
PWM1_CV6
PW2_CV7
PWM2_CV8
PWM INPUT 0-5V
CV INPUT 0-5V
U3A
LM2902
U3B
U3C
U3D
U2A
U2B
U2C
U2D
R22
220K
R23
330K
R24
47k
R25
47k
R26
1K
U7D
TL074
D1
BAT43
D2
BAT43
RV2
Offset 100k set to 1.65v
R16
220K
R17
330K
R18
47k
R19
47k
R20
1K
U6D
TL074
D6
BAT43
D7
BAT43
RV8
Offset 100k set to 1.65v
R6
R7
R8
R9
R12
R13
R1
R2
R4
R5
R14
R15
R21
-5V
Craig Barnes
Sheet: /
File: programmer.kicad_sch
Title: MIDI to CV 8 note
Size: A4
Date: 2022-09-22
Rev: 1
KiCad E.D.A. 8.0.8
Id: 1/1