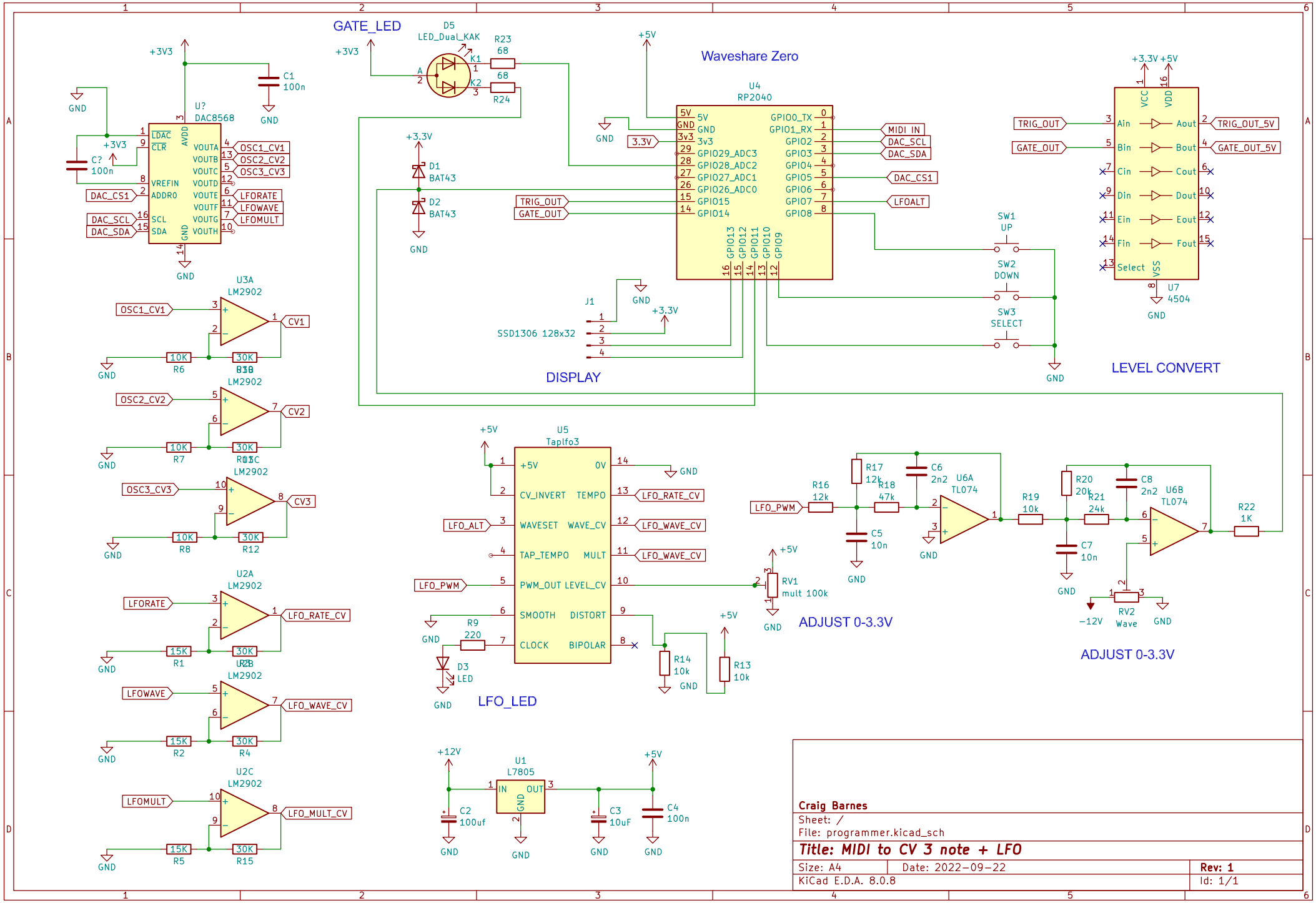
GATE_LED
D5
LED_Dual_KAK
R23
68
R24
68
+3V3
Waveshare Zero
U4
RP2040
+5V
GND
3.3V
MIDI IN
DAC_SCL
DAC_SDA
DAC_CS1
LFOALT
TRIG_OUT
GATE_OUT
D1
BAT43
D2
BAT43
J1
SSD1306 128x32
DISPLAY
SW1
UP
SW2
DOWN
SW3
SELECT
U7
4504
LEVEL CONVERT
TRIG_OUT_5V
GATE_OUT_5V
U?
DAC8568
C1
100n
C?
100n
OSC1_CV1
OSC2_CV2
OSC3_CV3
LFORATE
LFOWAVE
LFOMULT
U3A
LM2902
U3C
LM2902
U2A
LM2902
U2B
LM2902
U2C
LM2902
CV1
CV2
CV3
LFO_RATE_CV
LFO_WAVE_CV
LFO_MULT_CV
R6
R7
R8
R12
R1
R2
R4
R5
R15
U5
Taplfo3
LFO_ALT
LFO_PWM
LFO_RATE_CV
LFO_WAVE_CV
R9
220
D3
LED
LFO_LED
R14
10k
R13
10k
RV1
mult 100k
ADJUST 0-3.3V
R16
12k
R17
12k
R18
47k
C5
10n
C6
2n2
U6A
TL074
R19
10k
R20
20k
R21
24k
C7
10n
C8
2n2
U6B
TL074
R22
1K
RV2
Wave
−12V
ADJUST 0-3.3V
+12V
U1
L7805
IN
OUT
C2
100uf
C3
10uF
C4
100n
Craig Barnes
Sheet: /
File: programmer.kicad_sch
Title: MIDI to CV 3 note + LFO
Size: A4
Date: 2022-09-22
Rev: 1
KiCad E.D.A. 8.0.8
Id: 1/1