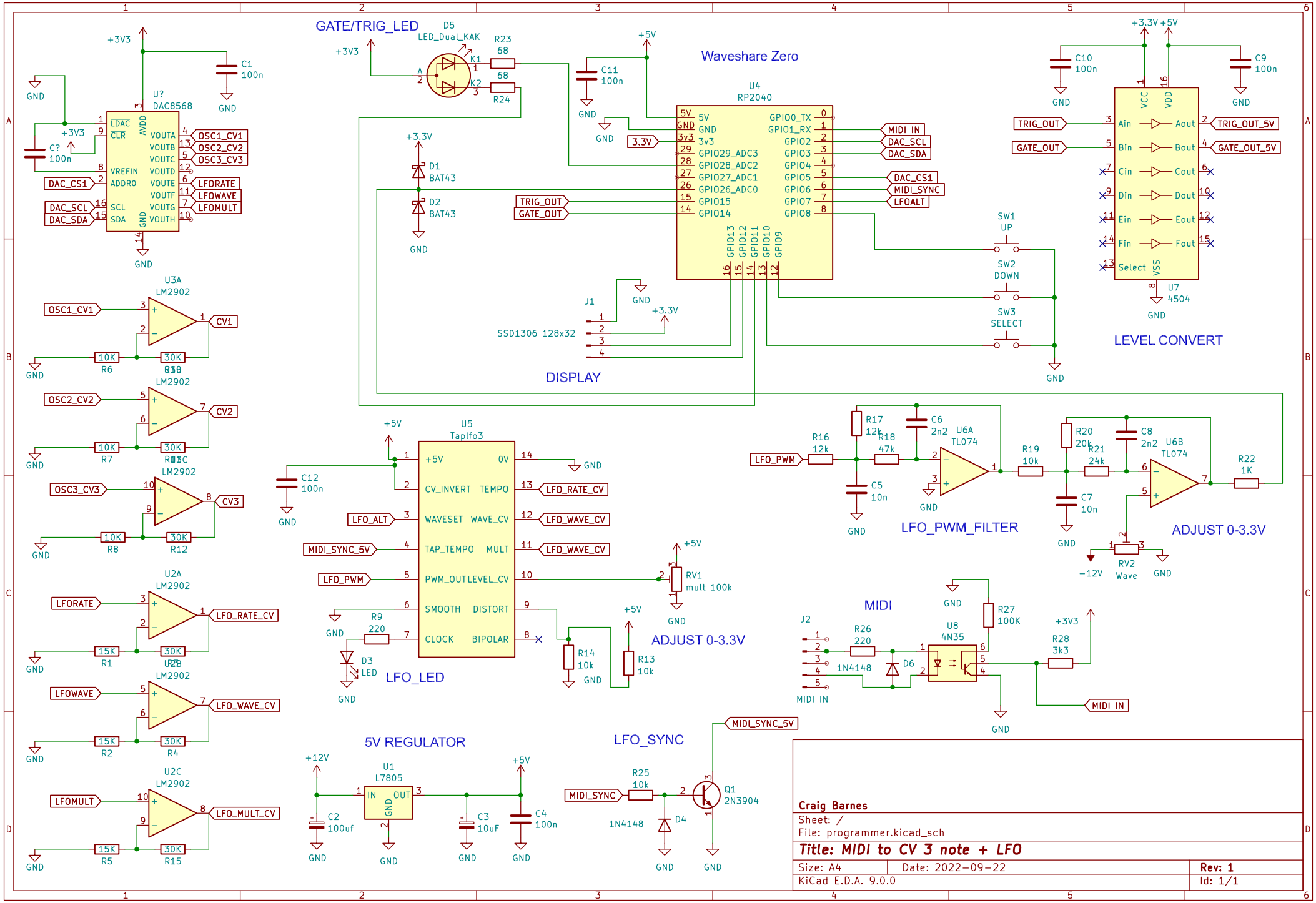
GATE/TRIG_LED
D5
LED_Dual_KAK
R23
68
R24
68
Waveshare Zero
U4
RP2040
U?
DAC8568
LEVEL CONVERT
U7
4504
DISPLAY
SSD1306 128x32
J1
SW1
UP
SW2
DOWN
SW3
SELECT
U3A
LM2902
U3B
U3C
U2A
U2B
U2C
U5
Taplfo3
LFO_PWM_FILTER
U6A
TL074
U6B
ADJUST 0-3.3V
RV1
mult 100k
RV2
Wave
LFO_LED
D3
LED
MIDI
J2
MIDI IN
U8
4N35
5V REGULATOR
U1
L7805
LFO_SYNC
Q1
2N3904
Craig Barnes
Sheet: /
File: programmer.kicad_sch
Title: MIDI to CV 3 note + LFO
Size: A4
Date: 2022-09-22
Rev: 1
KiCad E.D.A. 9.0.0
Id: 1/1