MOTOROLA
SEMICONDUCTOR
TECHNICAL DATA

MC6875
MC6875A

M6800 TWO-PHASE CLOCK GENERATOR/DRIVER

SCHOTTKY MONOLITHIC INTEGRATED CIRCUIT

M6800 CLOCK GENERATOR

Intended to supply the non-overlapping $\phi 1$ and $\phi 2$ clock signals required by the microprocessor, this clock generator is compatible with 1.0, 1.5, and 2.0 MHz versions of the MC6800. Both the oscillator and high capacitance driver elements are included along with numerous other logic accessory functions for easy system expansion.

Schottky technology is employed for high speed and PNP-buffered inputs are employed for NMOS compatibility. A single +5 V power supply, and a crystal or RC network for frequency determination are required.

7

Typical MPU System with Bus Extenders

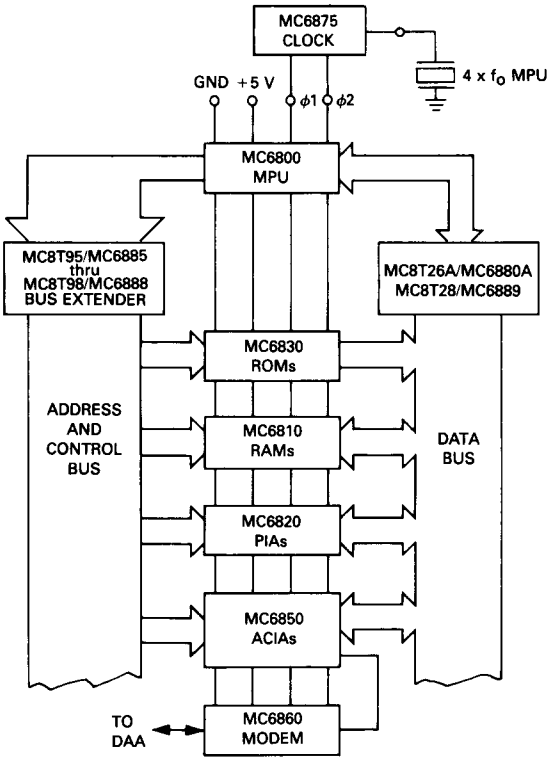

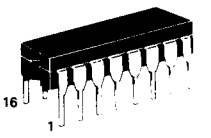

L SUFFIX
CERAMIC PACKAGE
CASE 620

PIN CONNECTIONS

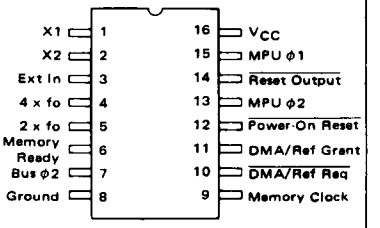

ORDERING INFORMATION

Device	Temperature Range	Package
MC6875L	0 to +70°C	Ceramic DIP
MC6875AL	−55 to +125°C	

MAXIMUM RATINGS (Unless otherwise noted $T_A = 25^oC$.)

Rating	Symbol	Value	Unit
Power Supply Voltage	V_{CC}	+7.0	Vdc
Input Voltage	V_I	+5.5	Vdc
Operating Ambient Temperature Range MC6875L MC6875AL	T_A	 0 to +70 -55 to +125	^oC
Storage Temperature Range	T_{stg}	-65 to +150	^oC
Operating Junction Temperature	T_J	175	^oC

NOTE:
Operation of the MC6875AL over the full military temperature range (to maximum T_A) will result in excessive operating junction temperature.

The use of a clip on 16 pin heat sink similar to AAVID Engineering, Inc., Model 5007 ($R_{\theta CA}$ = 18°C/W) is recommended above $T_A \approx 95°C$.

Contact AAVID Engineering, Inc.
30 Cook Court
Laconia, New Hampshire 03246
Tel. (603) 524-4443

RECOMMENDED OPERATING CONDITIONS

Rating	Symbol	Value	Unit
Power Supply Voltage	V_{CC}	+4.75 to +5.25	Vdc

ELECTRICAL CHARACTERISTICS
(Unless otherwise noted specifications apply over recommended power supply and temperature ranges. Typical values measured at V_{CC} = 5.0 V and $T_A = 25^oC$.)

Characteristic	Symbol	Min	Typ	Max	Unit
Output Voltage — High Logic State MPU $\phi1$ and $\phi2$ Outputs (V_{CC} = 4.75 V, I_{OHM} = -200 μA) (V_{CC} = 5.25 V, I_{OHMK} = +5.0 mA)	 V_{OHM} V_{OHMK}	 V_{CC} - 0.6 –	 – –	 – V_{CC} + 1.0	V
Bus $\phi2$ Output (V_{CC} = 4.75 V, I_{OHB} = -10 mA) (V_{CC} = 5.25 V, I_{OHBK} = +5.0 mA)	 V_{OHB} V_{OHBK}	 2.4 –	 – –	 – V_{CC} + 1.0	V
4 x fo Output (V_{CC} = 4.75 V, V_{IH} = 2.0 V, I_{OH4X} = -500 μA)	V_{OH4X}	2.4	–	–	V
2 x fo, DMA/Refresh Grant and Memory Clock Outputs (V_{CC} = 4.75 V, I_{OH} = -500 μA)	V_{OH}	2.4	–	–	V
Reset Output (V_{CC} = 4.75 V, V_{IH} = 3.3 V, $I_{OH\overline{R}}$ = -100 μA)	$V_{OH\overline{R}}$	2.4	–	–	V
Output Voltage — Low Logic State MPU $\phi1$ and $\phi2$ Outputs (V_{CC} = 4.75 V, I_{OLM} = +200 μA) (V_{CC} = 4.75 V, I_{OLMK} = -5.0 mA)	 V_{OLM} V_{OLMK}	 – –	 – –	 0.4 -1.0	V
Bus $\phi2$ Output (V_{CC} = 4.75 V, I_{OLB} = +48 mA) (V_{CC} = 4.75 V, I_{OLBK} = -5.0 mA)	 V_{OLB} V_{OLBK}	 – –	 – –	 0.5 -1.0	V
4 x fo Output (V_{CC} = 4.75 V, V_{IL} = 0.8 V, I_{OL4X} = 16 mA)	V_{OL4X}	–	–	0.5	V
2 x fo, DMA/Refresh Grant and Memory Clock Outputs (V_{CC} = 4.75 V, I_{OL} = 16 mA)	V_{OL}	–	–	0.5	V
Reset Output (V_{CC} = 4.75 V, V_{IL} = 0.8 V, $I_{OL\overline{R}}$ = 3.2 mA)	$V_{OL\overline{R}}$	–	–	0.5	V
Input Voltage — High Logic State Ext. In, Memory Ready and $\overline{DMA/Refresh}$ Request Inputs	V_{IH}	2.0	–	–	V
Input Voltage — Low Logic State Ext. In, Memory Ready and $\overline{DMA/Refresh}$ Request Inputs	V_{IL}	–	–	0.8	V
Input Thresholds — $\overline{Power\text{-}On\ Reset}$ Input (See Figure 2) Output Low to High Output High to Low	 V_{ILH} V_{IHL}	 – 0.8	 2.8 1.4	 3.6 –	V
Input Clamp Voltage (V_{CC} = 4.75 V, I_{IC} = -5.0 mA) MC6875L MC6875AL	V_{IK}	– –	– –	-1.0 -1.5	V
Input Current — High Logic State Ext. In, Memory Ready and $\overline{DMA/Refresh}$ Request Inputs (V_{CC} = 4.75 V, V_{IH} = 5.0 V) Power-On Reset (V_{CC} = 5.0 V, $V_{IH\overline{R}}$ = 5.0 V)	 I_{IH} $I_{IH\overline{R}}$	 – –	 – –	 25 50	 μA μA
Input Current — Low Logic State Ext. In, Memory Ready and $\overline{DMA/Refresh}$ Request Inputs (V_{CC} = 5.25 V, V_{IL} = 0.5 V) Power-On Reset Input[1] (V_{CC} = 5.25 V, V_{IL} = 0.5 V)	 I_{IL} $I_{IL\overline{R}}$	 – –	 – –	 -250 -250	 μA μA

OPERATING DYNAMIC POWER SUPPLY CURRENT

Characteristic	Symbol	Min	Typ	Max	Unit
Power Supply Currents (V_{CC} = 5.25 V, f_{osc} = 8.0 MHz, V_{IL} = 0 V, V_{IH} = 3.0 V) Normal Operation (Memory Ready and $\overline{\text{DMA/Refresh Request}}$ Inputs at High Logic State)	I_{CCN}	–	–	150	mA
Memory Ready Stretch Operation (Memory Ready Input at Low Logic State; $\overline{\text{DMA/Refresh Request}}$ Input at High Logic State)	I_{CCMR}	–	–	135	mA
$\overline{\text{DMA/Refresh Request}}$ Stretch Operation (Memory Ready Input at High Logic State; $\overline{\text{DMA/Refresh Request}}$ Input at Low Logic State)	I_{CCDR}	–	–	135	mA

SWITCHING CHARACTERISTICS

(These specifications apply whether the Internal Oscillator (see Figure 9) or an External Oscillator is used (see Figure 10). Typical values measured at V_{CC} = 5.0 V, T_A = 25°C, fo = 1.0 MHz (see Figure 8).

Characteristic	Symbol	Min	Typ	Max	Unit
MPU ϕ1 AND ϕ2 CHARACTERISTICS					
Output Period (Figure 3)	t_o	500	–	–	ns
Pulse Width (Figure 3)	t_{PWM}				ns
(fo = 1.0 MHz)		400	–	–	
(fo = 1.5 MHz)		230	–	–	
(fo = 2.0 MHz)		180	–	–	
Total Up Time (Figure 3)	t_{UPM}				ns
(fo = 1.0 MHz)		900	–	–	
(fo = 1.5 MHz)		600	–	–	
(fo = 2.0 MHz)		440	–	–	
Delay Time Referenced to Output Complement (Figure 3) Output High to Low State (Clock Overlap at 1.0 V)	t_{PLHM}	0	–	–	ns
Delay Times Referenced to 2 x fo (Figure 4 MPU ϕ2 only)					
Output Low to High Logic State	t_{PLHM2X}	–	–	85	ns
Output High to Low Logic State	t_{PHLM2X}	–	–	70	ns
Transition Times (Figure 3)					
Output Low to High Logic State	t_{TLHM}	–	–	25	ns
Output High to Low Logic State	t_{THLM}	–	–	25	ns
BUS ϕ2 CHARACTERISTICS					
Pulse Width – Low Logic State (Figure 4)	t_{PWLB}				ns
(fo = 1.0 MHz)		430	–	–	
(fo = 1.5 MHz)		280	–	–	
(fo = 2.0 MHz)		210	–	–	
Pulse Width – High Logic State	t_{PWHB}				ns
(fo = 1.0 MHz)		450	–	–	
(fo = 1.5 MHz)		295	–	–	
(fo = 2.0 MHz)		235	–	–	
Delay Times – (Referenced to MPU ϕ1) (Figure 4)					
Output Low to High Logic State	t_{PLHBM1}				ns
(fo = 1.0 MHz)		480	–	–	
(fo = 1.5 MHz)		320	–	–	
(fo = 2.0 MHz)		240	–	–	
Output High to Low Logic State	t_{PHLBM1}				
(C_L = 300 pF)		–	–	25	
(C_L = 100 pF)		–	–	20	
Delay Times (Referenced to MPU ϕ2) (Figure 4)					
Output Low to High Logic State	t_{PLHBM2}	-30	–	+25	ns
Output High to Low Logic State	t_{PHLBM2}	0	–	+40	ns
Transition Times (Figure 4)					
Output Low to High Logic State	t_{TLHB}	–	–	20	ns
Output High to Low Logic State	t_{THLB}	–	–	20	ns

SWITCHING CHARACTERISTICS (continued)

Characteristic	Symbol	Min	Typ	Max	Unit
MEMORY CLOCK CHARACTERISTICS					
Delay Times (Referenced to MPU $\phi 2$) (Figure 4)					
Output Low to High Logic State	t_{PLHCM}	-50	–	+25	ns
Output High to Low Logic State	t_{PHLCM}	0	–	+40	ns
Delay Times (Referenced to 2 x fo) (Figure 4)					
Output Low to High Logic State	t_{PLHC2X}	–	–	65	ns
Output High to Low Logic State	t_{PHLC2X}	–	–	85	ns
Transition Times (Figure 4)					
Output Low to High State	t_{TLHC}	–	–	25	ns
Output High to Low State	t_{THLC}	–	–	25	ns
2 x fo CHARACTERISTICS					
Delay Times (Referenced to 4 x fo) (Figure 4)					
Output Low to High Logic State	t_{PLH2X}	–	–	50	ns
Output High to Low Logic State	t_{PHL2X}	–	–	65	ns
Delay Time (Referenced to MPU $\phi 1$) (Figure 4)					
Output High to Low Logic State	$t_{PHL2XM1}$				ns
(fo = 1.0 MHz)		365	–	–	
(fo = 1.5 MHz)		220	–	–	
Transition Times (Figure 4)					
Output Low to High Logic State	t_{TLH2X}	–	–	25	ns
Output High to Low Logic State	t_{THL2X}	–	–	25	ns
4 x fo CHARACTERISTICS					
Delay Times (Referenced to Ext. In) (Figure 4)					
Output Low to High Logic State	t_{PLH4X}	–	–	50	ns
Output High to Low Logic State	t_{PHL4X}	–	–	30	ns
Transition Time (Figure 4)					
Output Low to High Logic State	t_{TLH4X}	–	–	25	ns
Output High to Low Logic State	t_{THL4X}	–	–	25	ns
MEMORY READY CHARACTERISTICS					
Set-Up Times (Figure 5)					
Low Input Logic State	t_{SMRL}	55	–	–	ns
High Input Logic State	t_{SMRH}	75	–	–	ns
Hold Time (Figure 5)					
Low Input Logic State	t_{HMRL}	10	–	–	ns
$\overline{\text{DMA/REFRESH REQUEST}}$ CHARACTERISTICS					
Set-Up Times (Figure 6)					
Low Input Logic State	t_{SDRL}	65	–	–	ns
High Input Logic State	t_{SDRH}	75	–	–	ns
Hold Time (Figure 6)					
Low Input Logic State	t_{HDRL}	10	–	–	ns
DMA/REFRESH GRANT CHARACTERISTICS					
Delay Time Referenced to Memory Clock (Figure 6)					
Output Low to High Logic State	t_{PLHG}	-15	–	+25	ns
Output High to Low Logic State	t_{PHLG}	-25	–	+15	ns
Transition Times (Figure 6)					
Output Low to High Logic State	t_{TLHG}	–	–	25	ns
Output High to Low Logic State	t_{THLG}	–	–	25	ns
$\overline{\text{RESET}}$ CHARACTERISTICS					
Delay Time Referenced to Power-On Reset (Figure 7)					
Output Low to High Logic State	$t_{PLH\overline{R}}$	–	–	1000	ns
Output High to Low Logic State	$t_{PHL\overline{R}}$	–	–	250	ns
Transition Times (Figure 7)					
Output Low to High Logic State	$t_{TLH\overline{R}}$	–	–	100	ns
Output High to Low Logic State	$t_{THL\overline{R}}$	–	–	50	ns

DESCRIPTION OF PIN FUNCTIONS

- 4 x f_o — A free running oscillator at four times the MPU clock rate useful for a system sync signal.
- 2 x f_o — A free running oscillator at two times the MPU clock rate.
- $\overline{\text{DMA/REF REQ}}$ — An asynchronous input used to freeze the MPU clocks in the $\phi 1$ high, $\phi 2$ low state for dynamic memory refresh or cycle steal DMA (Direct Memory Access).
- REF GRANT — A synchronous output used to synchronize the refresh or DMA operation to the MPU.
- MEMORY READY — An asynchronous input used to freeze the MPU clocks in the $\phi 1$ low, $\phi 2$ high state for slow memory interface.
- MPU $\phi 1$, MPU $\phi 2$ — Capable of driving the $\phi 1$ and $\phi 2$ inputs on two MC6800s.
- BUS $\phi 2$ — An output nominally in phase with MPU $\phi 2$ having MC8T26A type drive capability.
- MEMORY CLOCK — An output nominally in phase with MPU $\phi 2$ which free runs during a refresh request cycle.
- $\overline{\text{POWER-ON RESET}}$ — A Schmitt trigger input which controls $\overline{\text{Reset}}$. A capacitor to ground is required to set the desired time constant. Internal 50 k resistor to V_{CC}. See General Design Suggestions for Manual Reset Operation.
- $\overline{\text{RESET}}$ — An output to the MPU and I/O devices.
- X1, X2 — Provision to attach a series resonant crystal or RC network.
- EXT IN — Allows driving by an external TTL signal to synchronous the MPU to an external system.

FIGURE 1 – BLOCK DIAGRAM

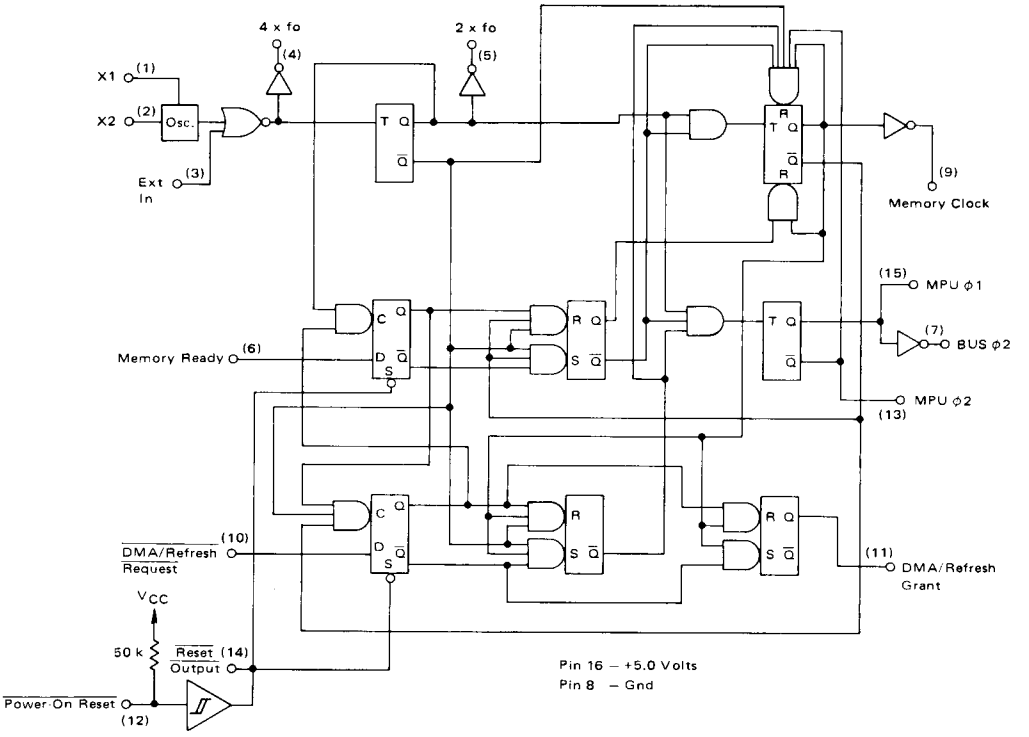

7

FIGURE 2 – TYPICAL HYSTERESIS CHARACTERISTIC OF RESET FUNCTION

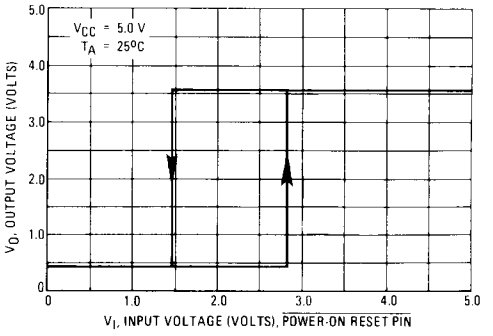

FIGURE 3 – TIMING DIAGRAM FOR MPU φ1 AND φ2

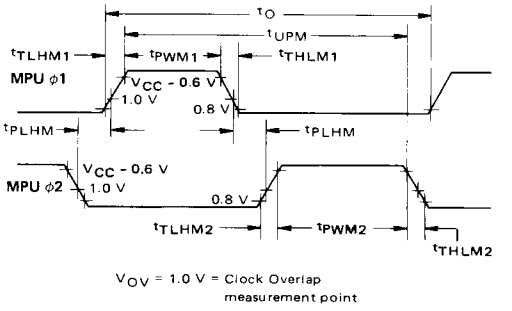

FIGURE 4 – TIMING DIAGRAM FOR NON-STRETCHED OPERATION
(Memory Ready and $\overline{\text{DMA}}$/Refresh Request held high continuously)
Ext. In Input Voltage: 0 V to 3.0 V, f = 8.0 MHz, Duty Cycle = 50%, $t_{TLHEX} = t_{THLEX} = 5.0$ ns

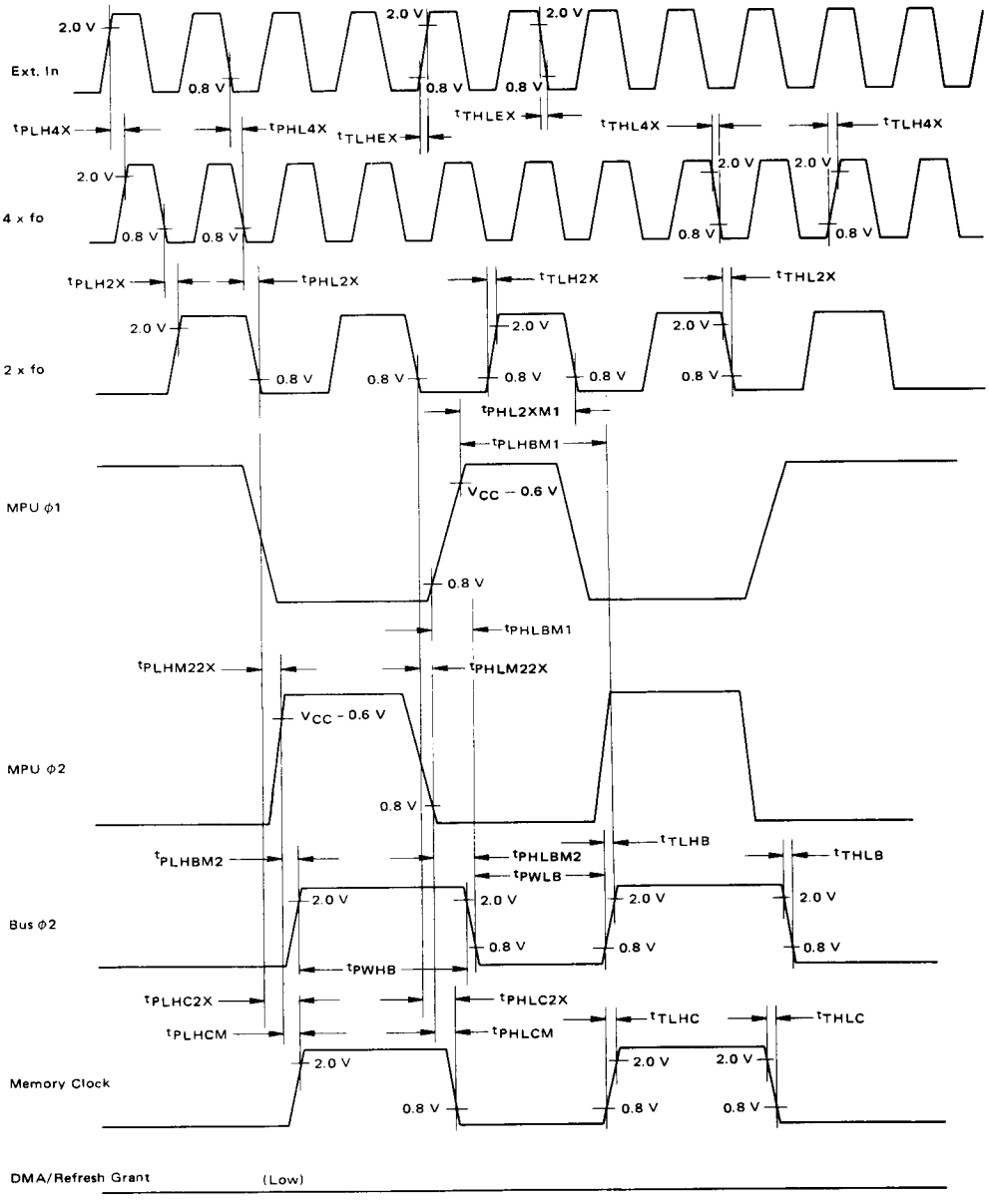

FIGURE 5 – TIMING DIAGRAM FOR MEMORY READY STRETCH OPERATION
(Minimum Stretch Shown)
Input Voltage: 3.0 to 0 V, $t_{THLMR} = t_{TLHMR} = 5.0$ ns

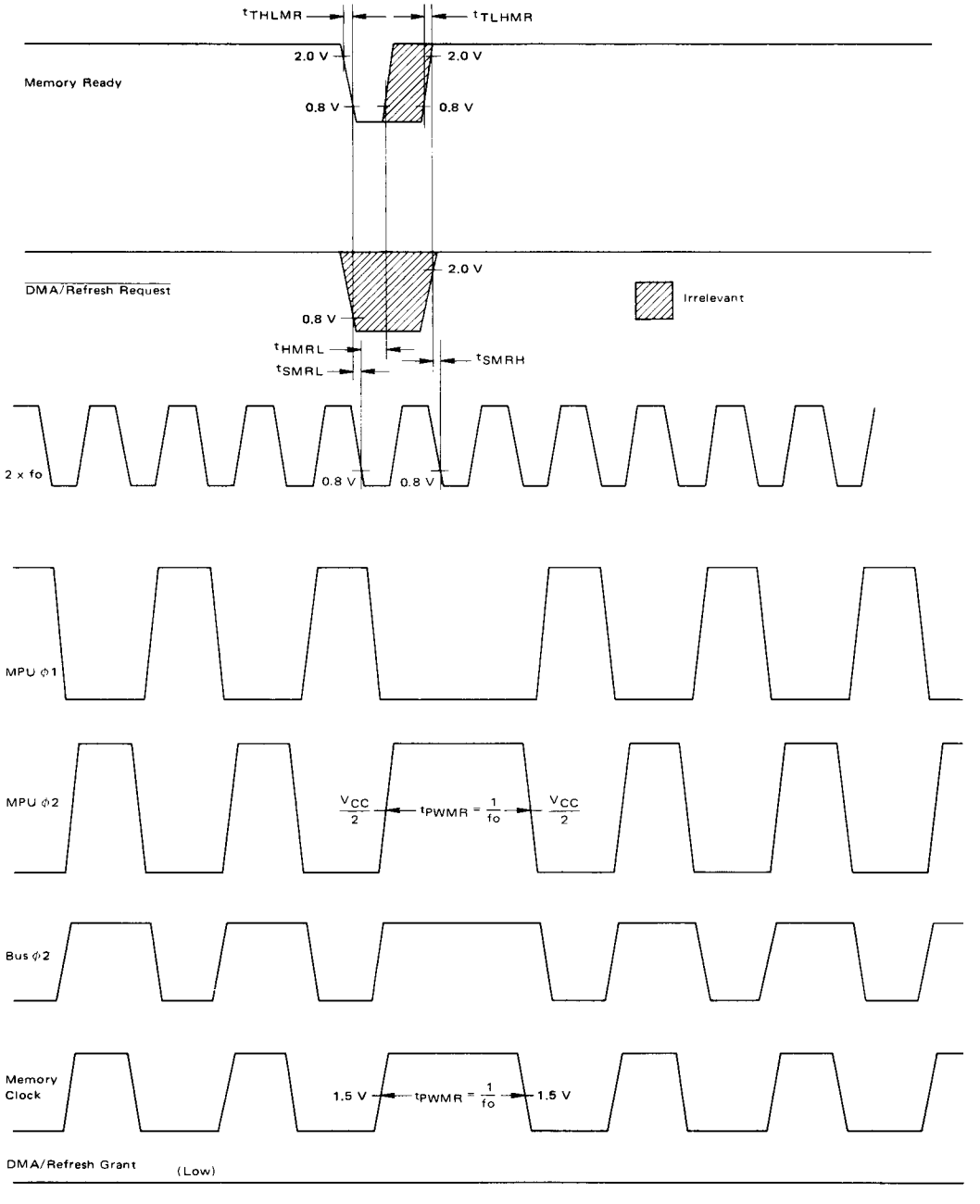

FIGURE 6 – TIMING DIAGRAM FOR $\overline{\text{DMA/REFRESH REQUEST}}$ STRETCH OPERATION
(Minimum Stretch Shown)
Input Voltage: 3.0 to 0 V, $t_{THLDR} = t_{TLHDR} = 5.0$ ns

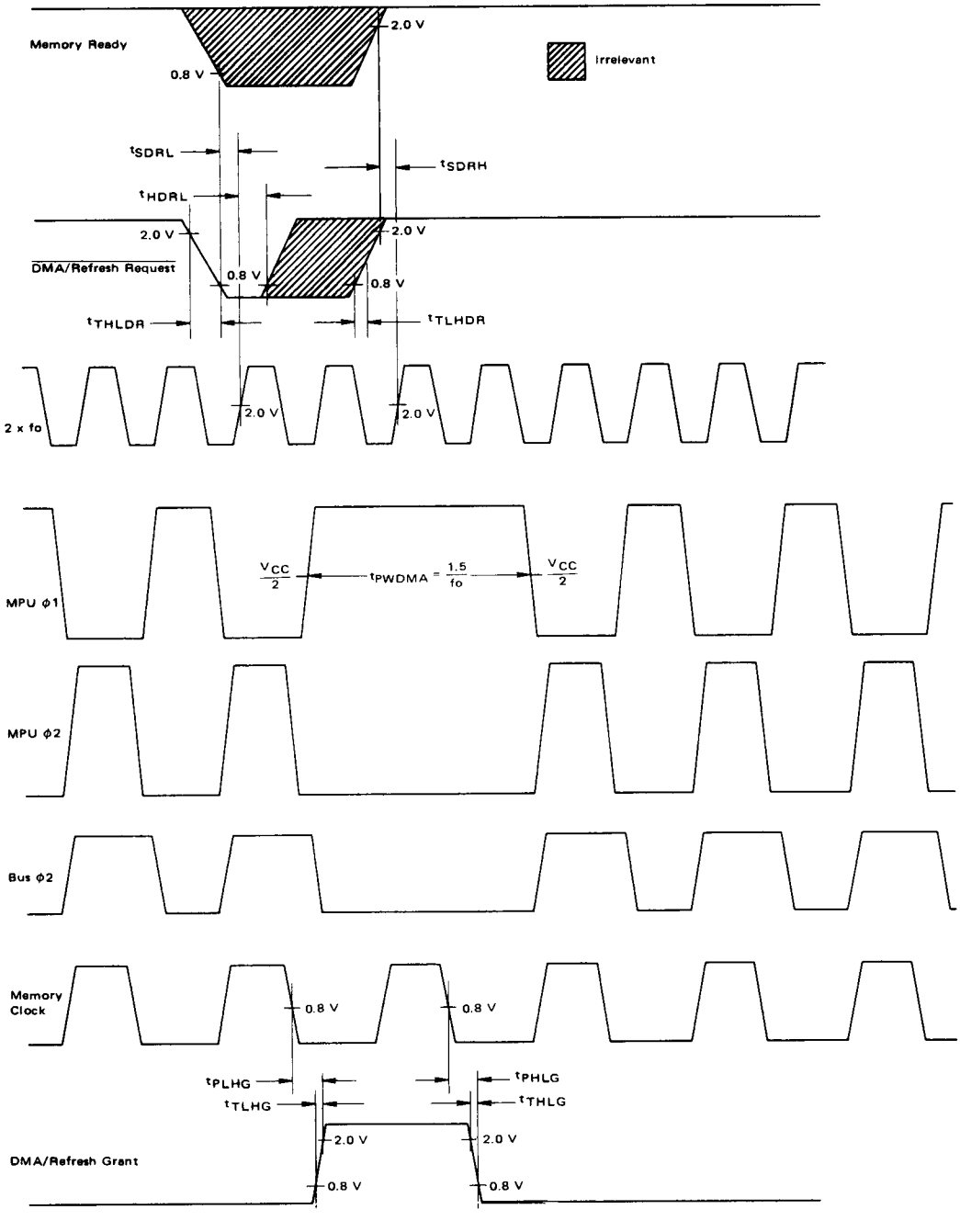

FIGURE 7 – $\overline{\text{POWER ON RESET}}$

Input Voltage: 0 to 5.0 V, f = 100 kHz – Pulse Width = 1.0 µs, $t_{TLH} = t_{THL}$ = 25 ns

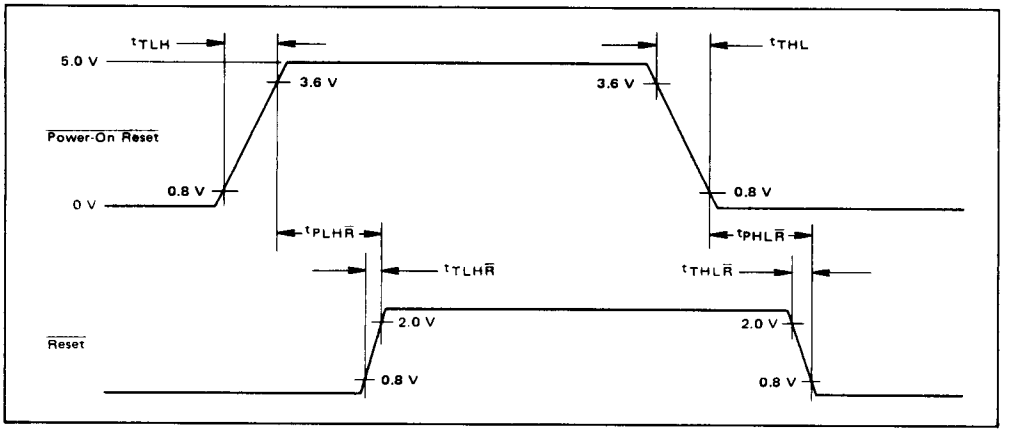

FIGURE 8 – LOAD CIRCUITS

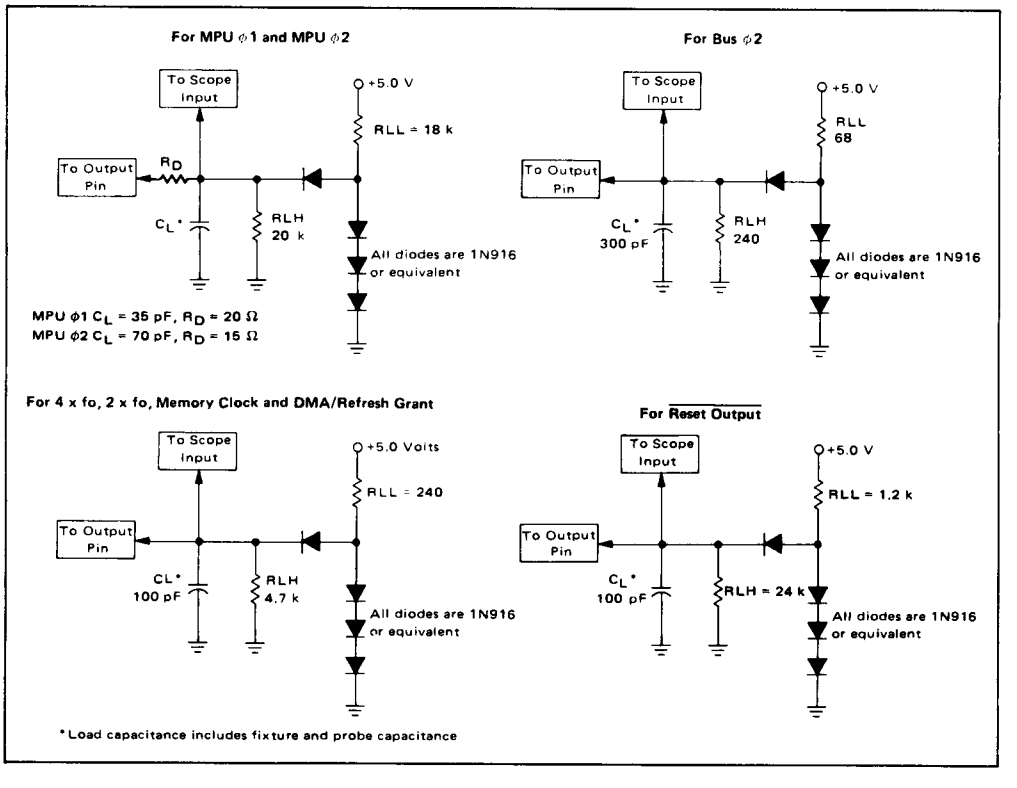

APPLICATIONS INFORMATION

FIGURE 9 – TYPICAL RC FREQUENCY versus VOLTAGE

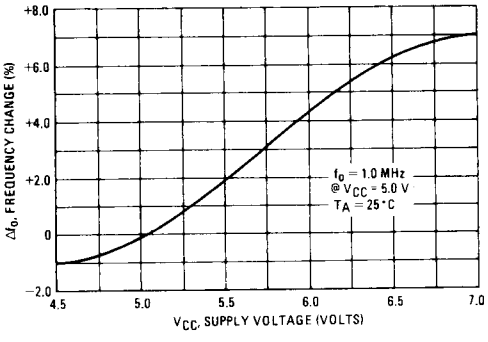

FIGURE 10 – TYPICAL RC FREQUENCY versus TEMPERATURE

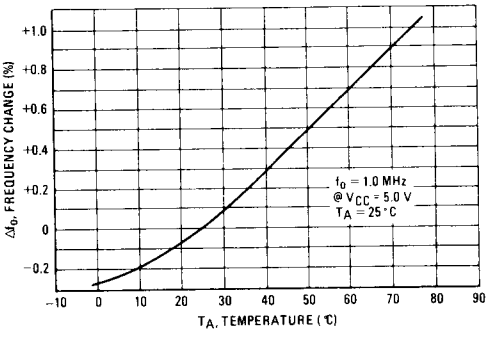

FIGURE 11 – TYPICAL FREQUENCY versus RESISTANCE FOR C VARIABLE

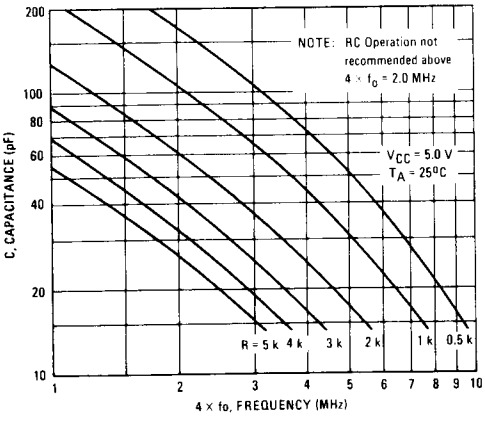

GENERAL

The MC6875 Clock Generator/Driver should be located on the same board and within two inches of the MC6800 MPU. Series damping resistors of 10-30 ohms may be utilized between the MC6875 and the MC6800 on the $\phi 1$ and $\phi 2$ clocks to suppress overshoot and reflections.

The V_{CC} pin (pin 16) of the MC6875 should be bypassed to the ground pin (pin 8) at the package with a 0.1 μF capacitor. Because of the high peak currents associated with driving highly capacitive loads, an adequately large ground strip to pin 8 should be used on the MC6875. Grounds should be carefully routed to minimize coupling of noise to the sensitive oscillator inputs. Unnecessary grounds or ground planes should be avoided near pin 2 or the frequency determining components. These components should be located as near as possible to the respective pins of the MC6875. Stray capacitance near pin 2 or the crystal, can affect the frequency. The can of the crystal should not be grounded. The ground side of the crystal or the C of the R-C oscillator should be connected as directly as possible to pin 8.

Unused inputs should be connected to V_{CC} or ground. Memory Ready, $\overline{\text{DMA}}$/Refresh Request and $\overline{\text{Power-On Reset}}$ should be connected to V_{CC} when not used. The External Input should be connected to ground when not used.

OSCILLATOR

A tank circuit tuned to the desired crystal frequency connected between terminals X_1 and X_2 as shown in Figure 12, is recommended to prevent the oscillator from starting at other than the desired frequency. The 1kΩ resistor reduces the Q sufficiently to maintain stable crystal control. Crystal manufacturers may recommend a capacitance (C_L) to be used in series with the crystal for optimum performance at series resonance.

See Figures 9 and 10 for typical oscillator temperature and V_{CC} supply dependence for R-C operation.

FIGURE 12 – OSCILLATOR–CRYSTAL OPERATION

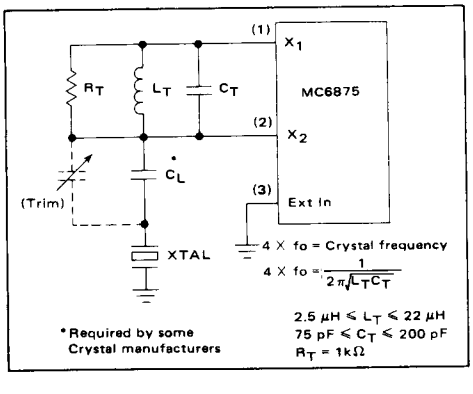

TABLE 1 – OSCILLATOR COMPONENTS

TANK CIRCUIT PARAMETERS		APPROXIMATE CRYSTAL PARAMETERS				CTS KNIGHTS 400 REIMANN AVE. SANDWICH, IL 60548 (815) 786-8411	McCOY ELECT. CO. WATTS & CHESTNUTS STS. MT. HOLLY SPRING, PA 17065 (717) 486-3411	TYCO CRYSTAL PRODUCTS 3940 W. MONTECITO PHOENIX, AZ 85019 (602) 272-7945
L_T µH	C_T pF	R_S Ohms	C_o pF	C_1 mpF	fo MHz			
10	150	15-75	3-6	12	4.0	MP-04A * 390 pF	113-31	150-3260
4.7	82	8-45	4-7	23	8.0	MP-080 * 47 pF	113-32	150-3270

Inductors may be obtained from: Coilcraft, Cary, IL 60013 (312) 639-2361

FIGURE 13

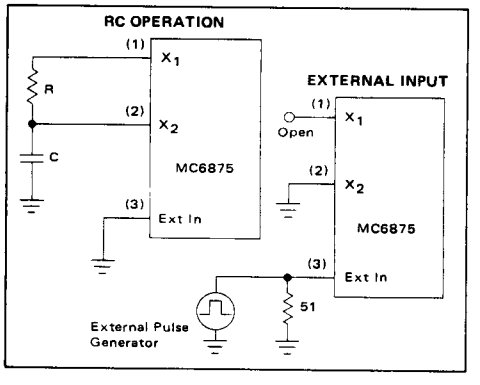

To precisely time a crystal to desired frequency, a variable trimmer capacitor in the range of 7 to 40 pF would typically be used. Note it is not a recommended practice to tune the crystal with a parallel load capacitance.

The table above shows typical values for C_T and L_T, typical crystal characteristics, and manufacturers' part numbers for 4.0 and 8.0 megahertz operation.

The MC6875 will function as an R-C oscillator when connected as shown in Figure 13. The desired output frequency (Mϕ1) is approximately:

Formula

$$4 \times fo \approx \frac{320}{C\,(R + .27) + 23}$$

C in picofarads
R in K ohms
4 x fo in Megahertz

(See Figure 11)

It would be desirable to select a capacitor greater than 15 pF to minimize the effects of stray capacitance. It is also desirable to keep the resistor in the 1 to 5 k Ω range. There is a nominal 270 Ω resistor internally at X_1 which is in series with the external R. By keeping the external R as large as possible, the effects due to process variations of the internal resistor on the frequency will be reduced. There will, however, still be some variation in frequency in a production lot both from the resistance variations, external and internal, and process variations of the input switching thresholds. Therefore, in a production system, it is recommended a potentiometer be placed in series with a fixed R between X_1 and X_2.

POWER-ON RESET

As the power to the MC6875 comes up, the $\overline{\text{Reset Output}}$ will be in a high impedance state and will not give a solid V_{OL} output level until V_{CC} has reached 3.5 to 4.0 V. During this time transients may appear on the clock outputs as the oscillator begins to start. This happens at approximately V_{CC} = 3 V. At some V_{CC} level above that, where $\overline{\text{Reset Output}}$ goes low, all the clock outputs will begin functioning normally. This phenomenon of the start-up sequence should not cause any problems except possibly in systems with battery back-up memory. The transients on the clock lines during the time the $\overline{\text{Reset Output}}$ is high impedance could initiate the system in some unknown mode and possibly write into the backup memory system. Therefore in battery backup systems, more elaborate reset circuitry will be required.

Please note that the $\overline{\text{Power-On Reset}}$ input pin of the MC6875 is not suitable for use with a manual MPU reset switch if the $\overline{\text{DMA/Ref Req}}$ or Memory Ready inputs are going to be used. The power on reset circuitry is used to initialize the internal control logic and whenever the input is switched low, the MC6875 is irresponsive to the $\overline{\text{DMA/Ref Req}}$ or Memory Ready inputs. This may result in the loss of dynamic memory and/or possibly a byte of slow static memory. The circuit of Figure 14 is recommended for applications which do not utilize the $\overline{\text{DMA/Ref Req}}$ or Memory Ready inputs. The circuit of Figure 15 is recommended for those applications that do.

FIGURE 14 – MANUAL RESET FOR APPLICATIONS NOT USING $\overline{\text{DMA/REFRESH REQUEST}}$ OR MEMORY READY INPUTS

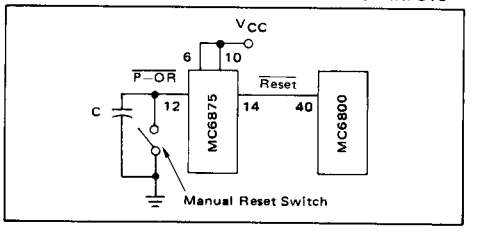
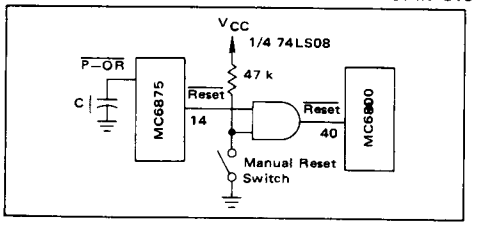
FIGURE 15 – MANUAL RESET FOR SYSTEMS USING DYNAMIC RAM OR SLOW STATIC RAM IN CONJUNCTION WITH MEMORY READY OR $\overline{\text{DMA/REFRESH REQUEST}}$ INPUTS