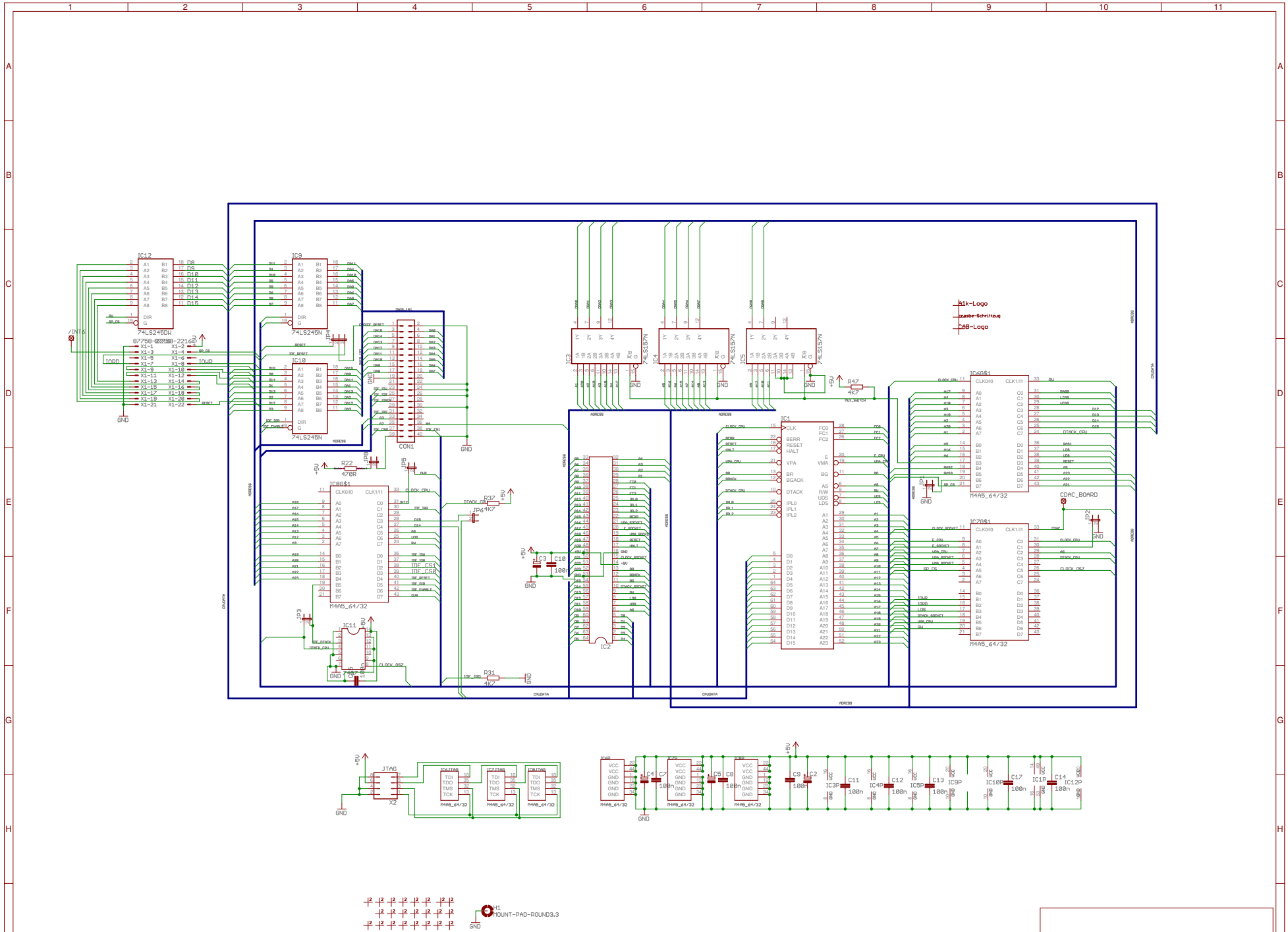

TITLE: Protein

Document Number:

REV: 1.2

Date: 30.08.15 03:26

Sheet: 1/2

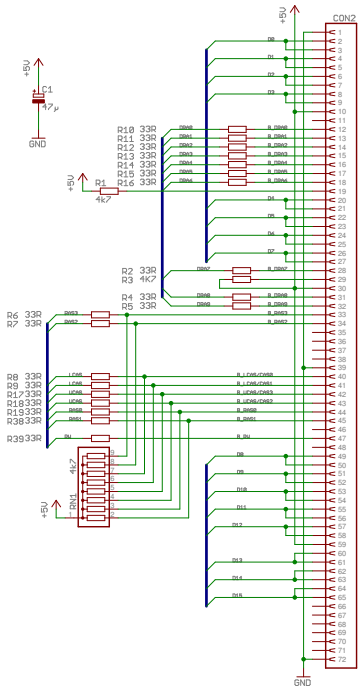

Protein

30.08.15 03:26

Sheet: 2/2