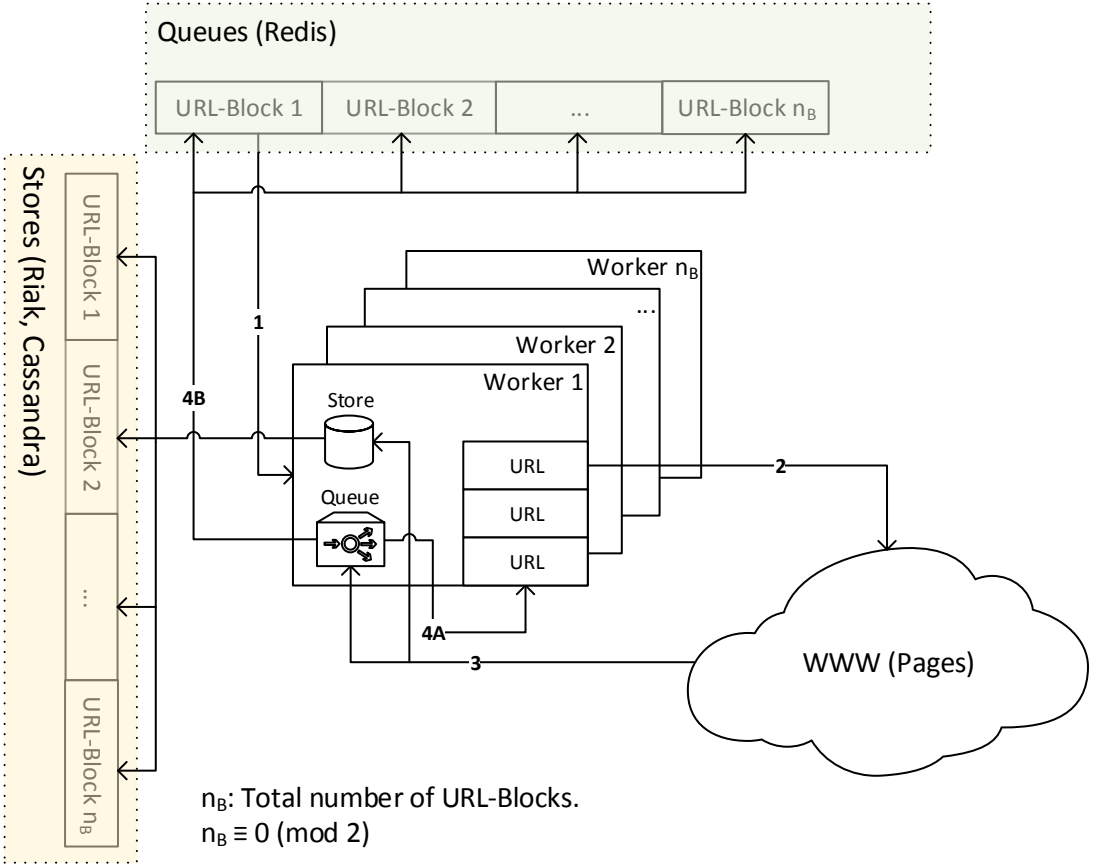
Queues (Redis)
URL-Block 1
URL-Block 2
...
URL-Block n_B
Stores (Riak, Cassandra)
URL-Block 1
URL-Block 2
...
URL-Block n_B
Worker n_B
...
Worker 2
Worker 1
Store
Queue
URL
URL
URL
1
2
3
4A
4B
WWW (Pages)
n_B: Total number of URL-Blocks.
$n_B \equiv 0 \pmod 2$