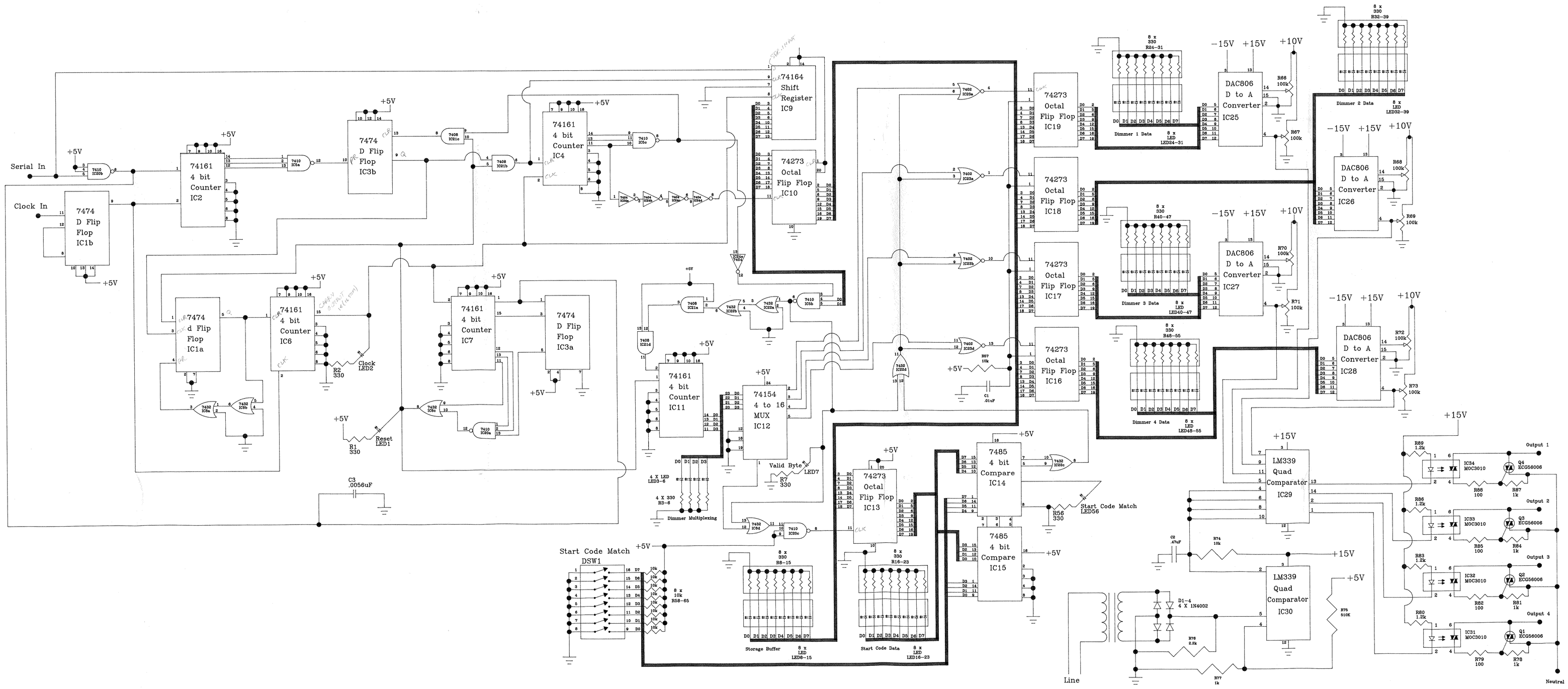

DMX Demonstrator

4

Reciever Schematic

Date: 12/15/94

Drawn: R.W.