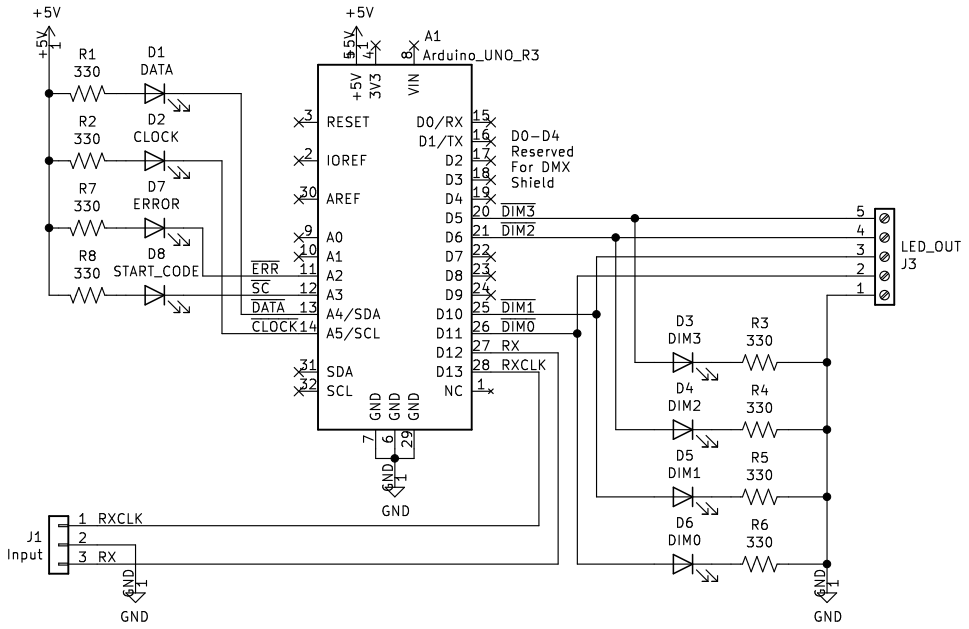

Released under the Creative Commons Attribution Share-Alike 4.0 License
https://creativecommons.org/licenses/by-sa/4.0/
Designed by: SparkyBobo

Crazy Giraffe Software

Sheet: /
File: receiver.sch

Title: DMX Demonstrator – Receiver (DMX-RX1)

Size: A4	Date: 2020-11-07	**Rev: 1.1**
KiCad E.D.A. kicad (5.0.0)		Id: 1/1