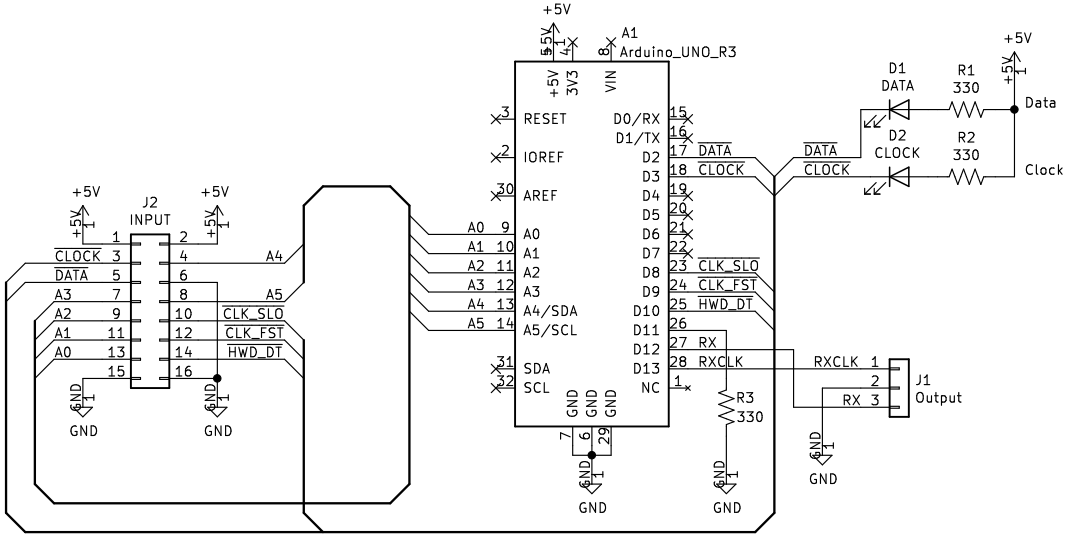

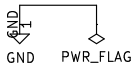

Released under the Creative Commons Attribution Share-Alike 4.0 License
https://creativecommons.org/licenses/by-sa/4.0/
Designed by: SparkyBobo

Crazy Giraffe Software

Sheet: /
File: transmitter.sch

Title: DMX Demonstrator - Transmitter for Control-Pro (DMX-TX2)

Size: A4	Date: 2020-09-25	**Rev: 1.0**
KiCad E.D.A. kicad (5.0.0)		Id: 1/1