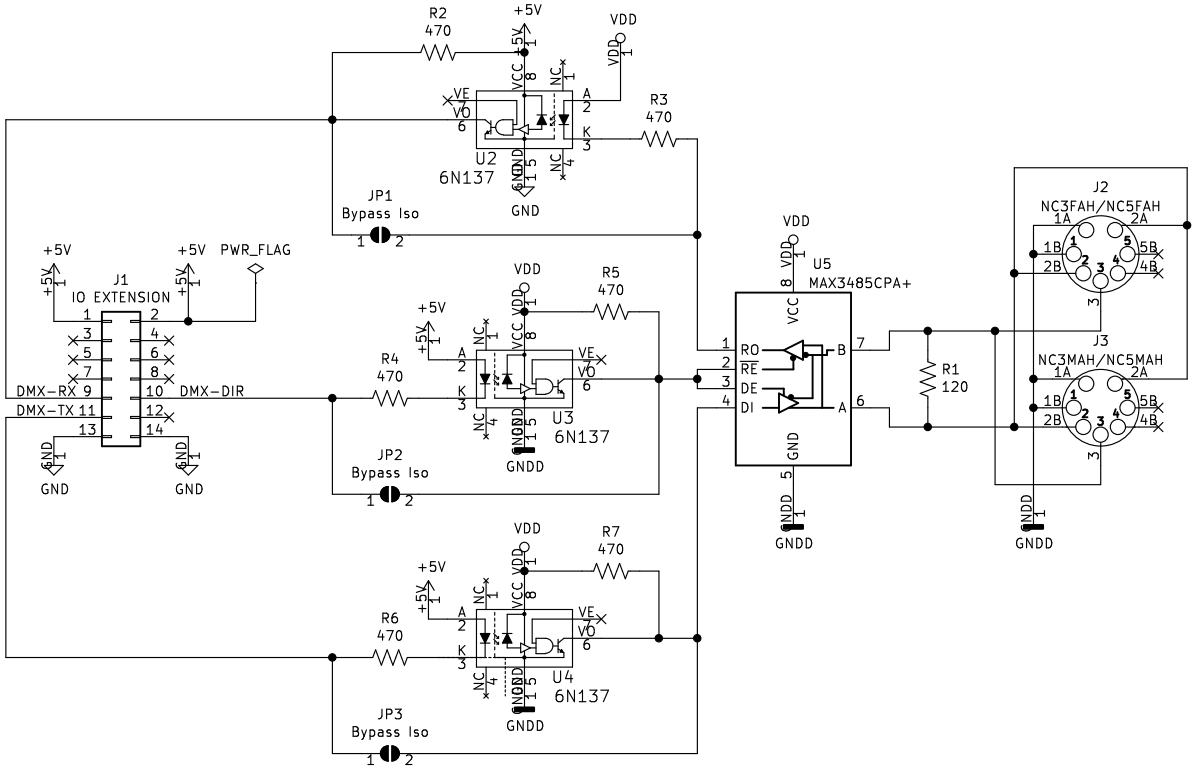

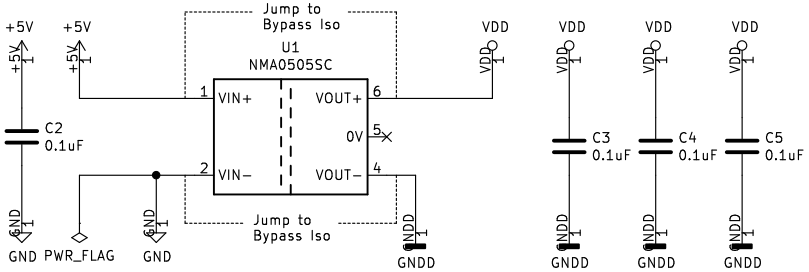

MH1 MountingHole
MH2 MountingHole
MH3 MountingHole
MH4 MountingHole

Released under the Creative Commons Attribution Share-Alike 4.0 License
https://creativecommons.org/licenses/by-sa/4.0/
Designed by: SparkyBobo

Crazy Giraffe Software

Sheet: /
File: io-dmx-512.sch

Title: DMX Demonstrator - DMX-512 IO Module (DMX-IO1)

Size: A4	Date: 2023-10-28	**Rev: 1.4**
KiCad E.D.A. kicad (5.0.0)		Id: 1/1