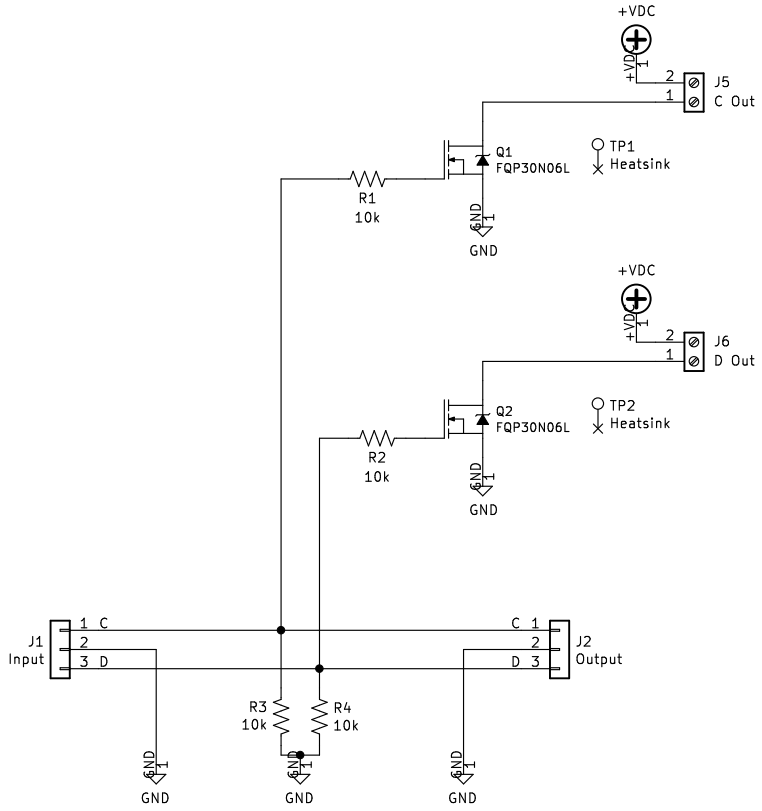

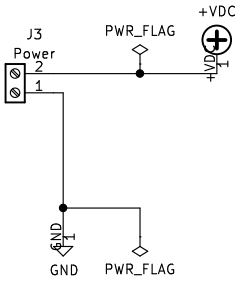

MH1 MountingHole

MH2 MountingHole

MH3 MountingHole

MH4 MountingHole

Released under the Creative Commons Attribution Share-Alike 4.0 License
https://creativecommons.org/licenses/by-sa/4.0/
Designed by: SparkyBobo

Sparky Bobo Designs

Sheet: /
File: led-driver-voltage.sch

Title: DMX Demonstrator - Constant Voltage Driver (DMX-DCV)

Size: A4	Date: 2024-02-09	**Rev: 1.6**
KiCad E.D.A. kicad (5.1.12)-1		Id: 1/1