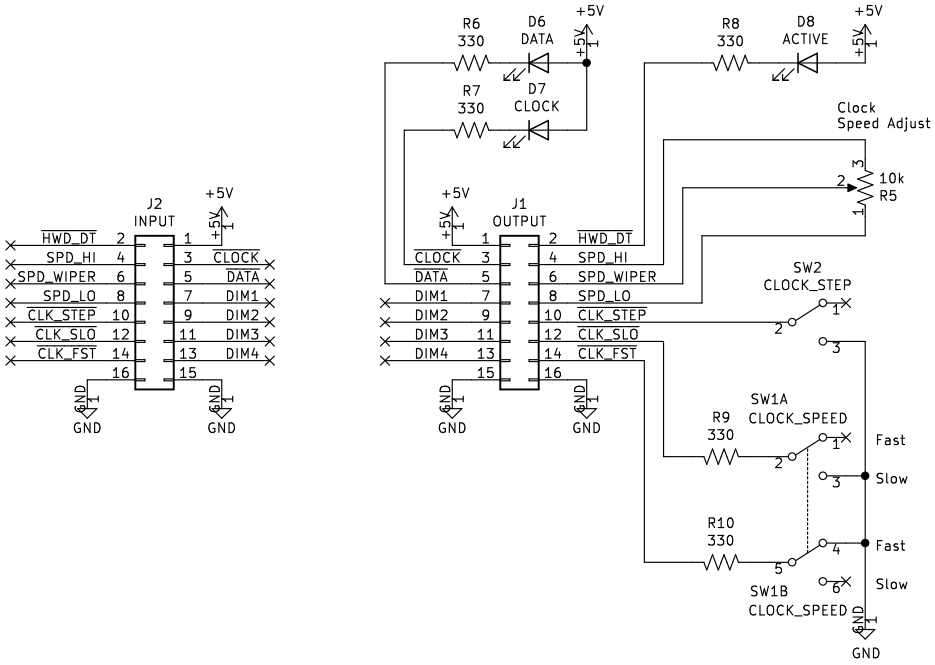


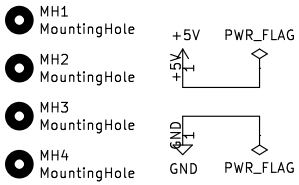


Released under the Creative Commons Attribution Share-Alike 4.0 License
https://creativecommons.org/licenses/by-sa/4.0/
Designed by: SparkyBobo

**Crazy Giraffe Software**

Sheet: /
File: clock-control.sch

**Title: DMX Demonstrator - Control-Pro Clock (DMX-CPCB)**

| | | |
|---|---|---|
| Size: A4 | Date: 2023-12-04 | **Rev: 1.3** |
| KiCad E.D.A. kicad (5.0.0) | | Id: 1/1 |