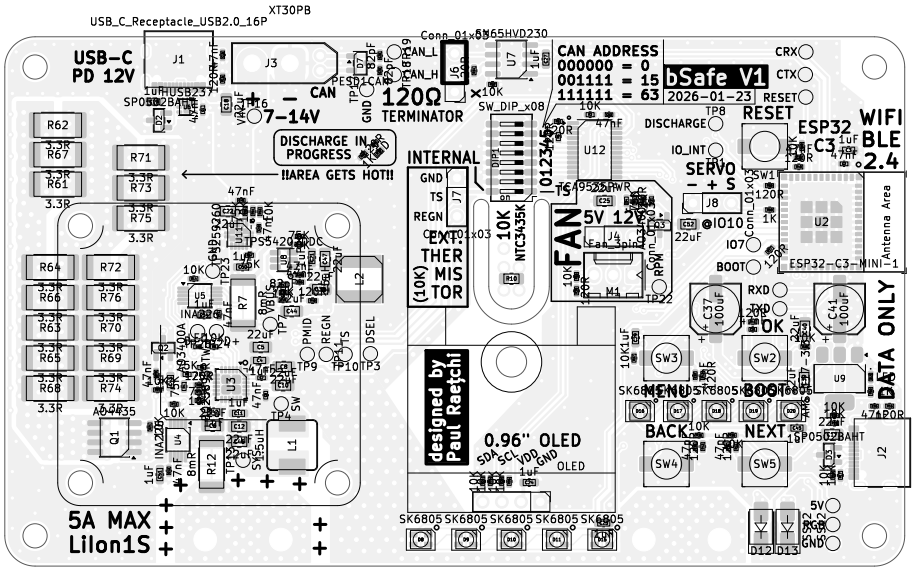

Board2Pdf: Black And White TOP – Page 1/2

Sheet: Black And White TOP
File: bSafe-charger-block.kicad_pcb

Title:

Size: A4	Date:	Rev:
KiCad E.D.A. 9.0.7		Id: /1

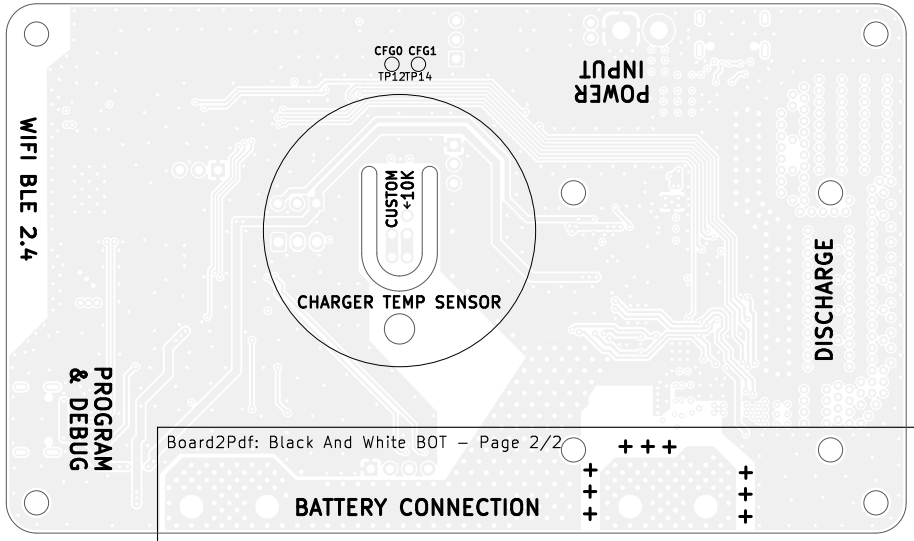

Board2Pdf: Black And White BOT – Page 2/2

Sheet: Black And White BOT
File: bSafe–charger–block.kicad_pcb

Title:

Size: A4	Date:	Rev:
KiCad E.D.A. 9.0.7		Id: /1