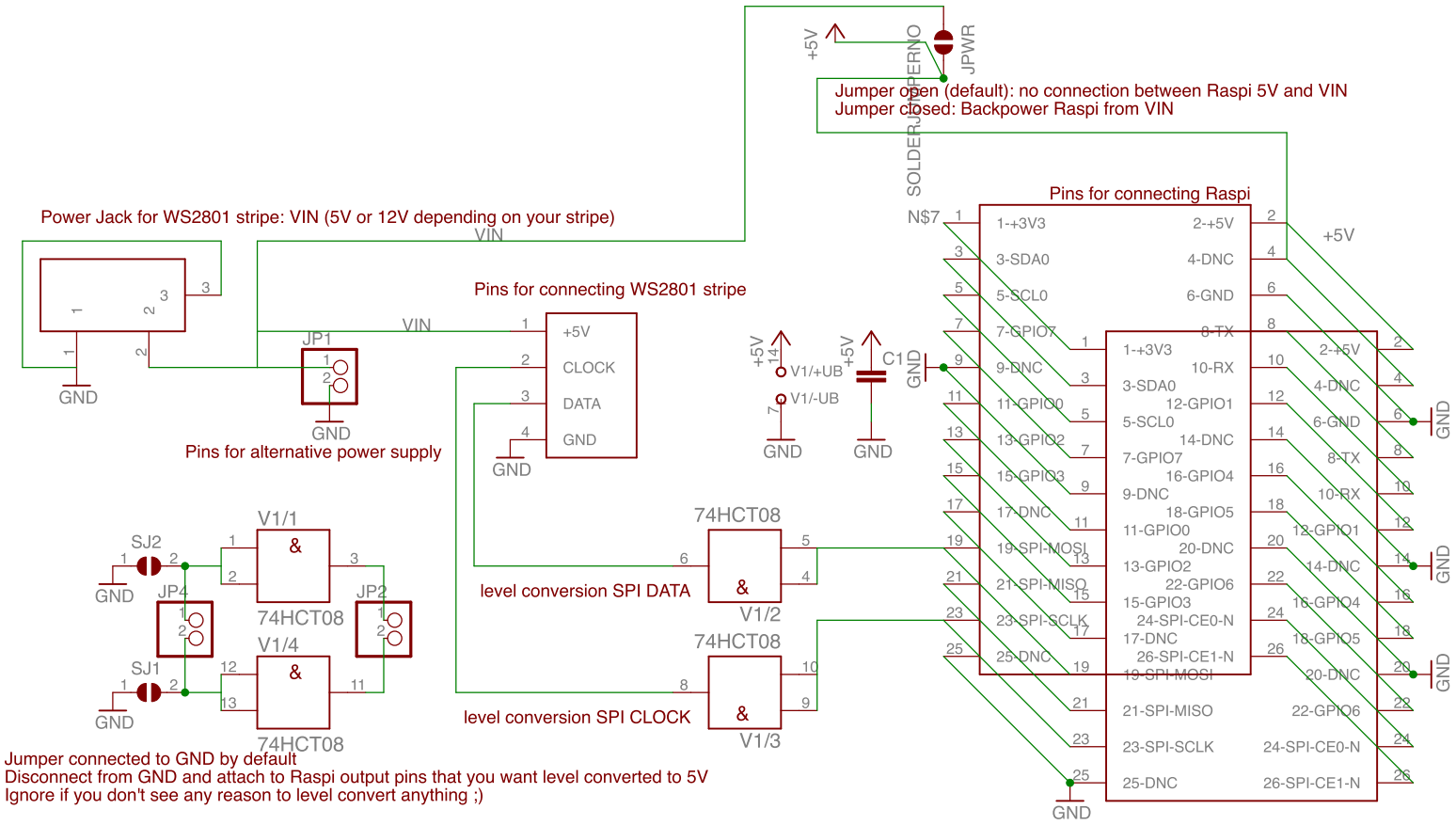
Jumper open (default): no connection between Raspi 5V and VIN
Jumper closed: Backpower Raspi from VIN
+5V
SOLDERJUMPER NO
JPWR
Pins for connecting Raspi
Power Jack for WS2801 stripe: VIN (5V or 12V depending on your stripe)
VIN
GND
JP1
Pins for alternative power supply
Pins for connecting WS2801 stripe
+5V
CLOCK
DATA
GND
V1/+UB
V1/-UB
C1
N$7
1-+3V3
2-+5V
3-SDA0
4-DNC
5-SCL0
6-GND
7-GPIO7
8-TX
9-DNC
10-RX
11-GPIO0
12-GPIO1
13-GPIO2
14-DNC
15-GPIO3
16-GPIO4
17-DNC
18-GPIO5
19-SPI-MOSI
20-DNC
21-SPI-MISO
22-GPIO6
23-SPI-SCLK
24-SPI-CE0-N
25-DNC
26-SPI-CE1-N
SJ2
SJ1
JP4
JP2
V1/1
V1/2
V1/3
V1/4
74HCT08
level conversion SPI DATA
level conversion SPI CLOCK
Jumper connected to GND by default
Disconnect from GND and attach to Raspi output pins that you want level converted to 5V
Ignore if you don't see any reason to level convert anything ;)