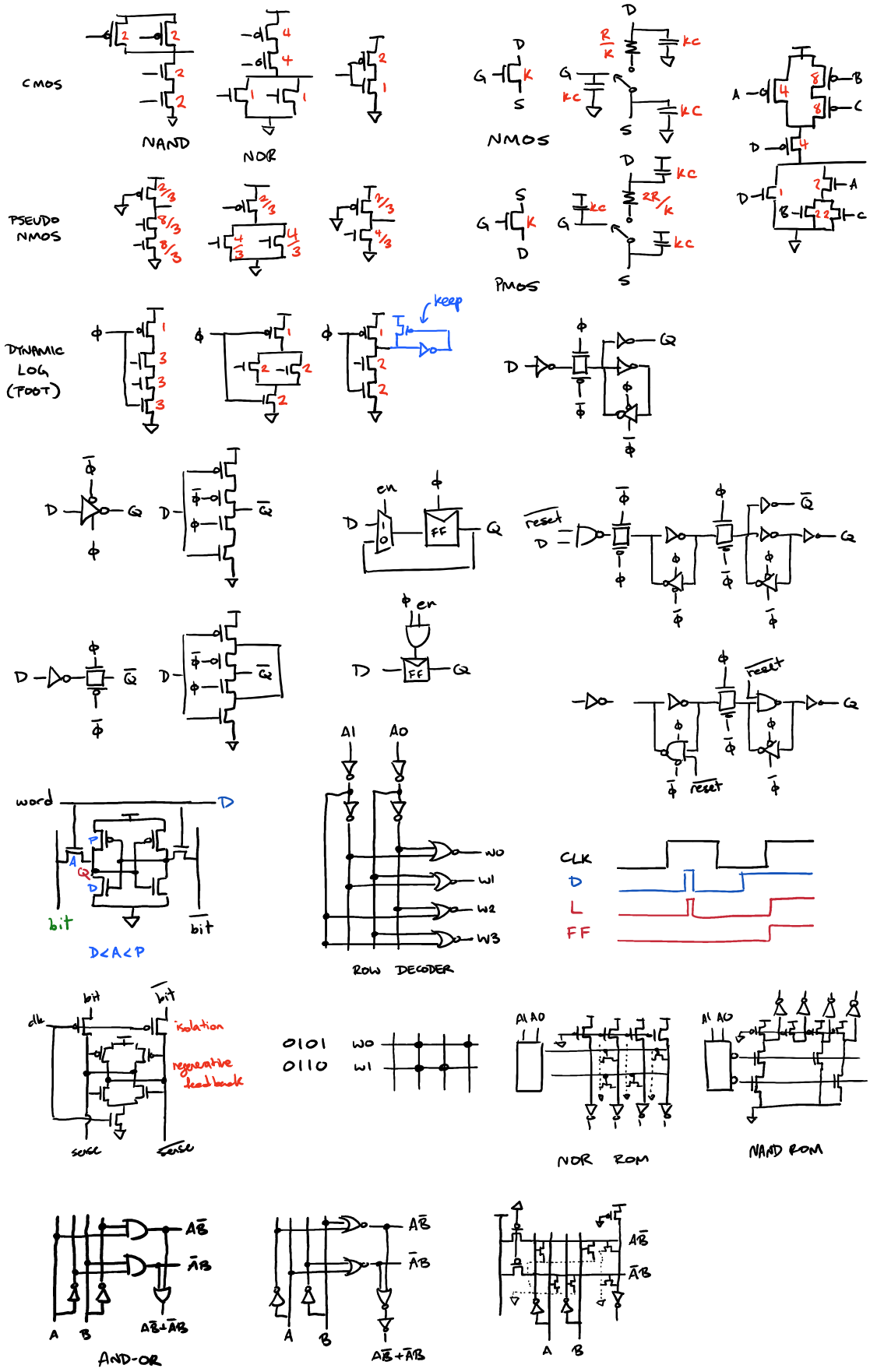Friday, December 9, 2016 5:13 PM