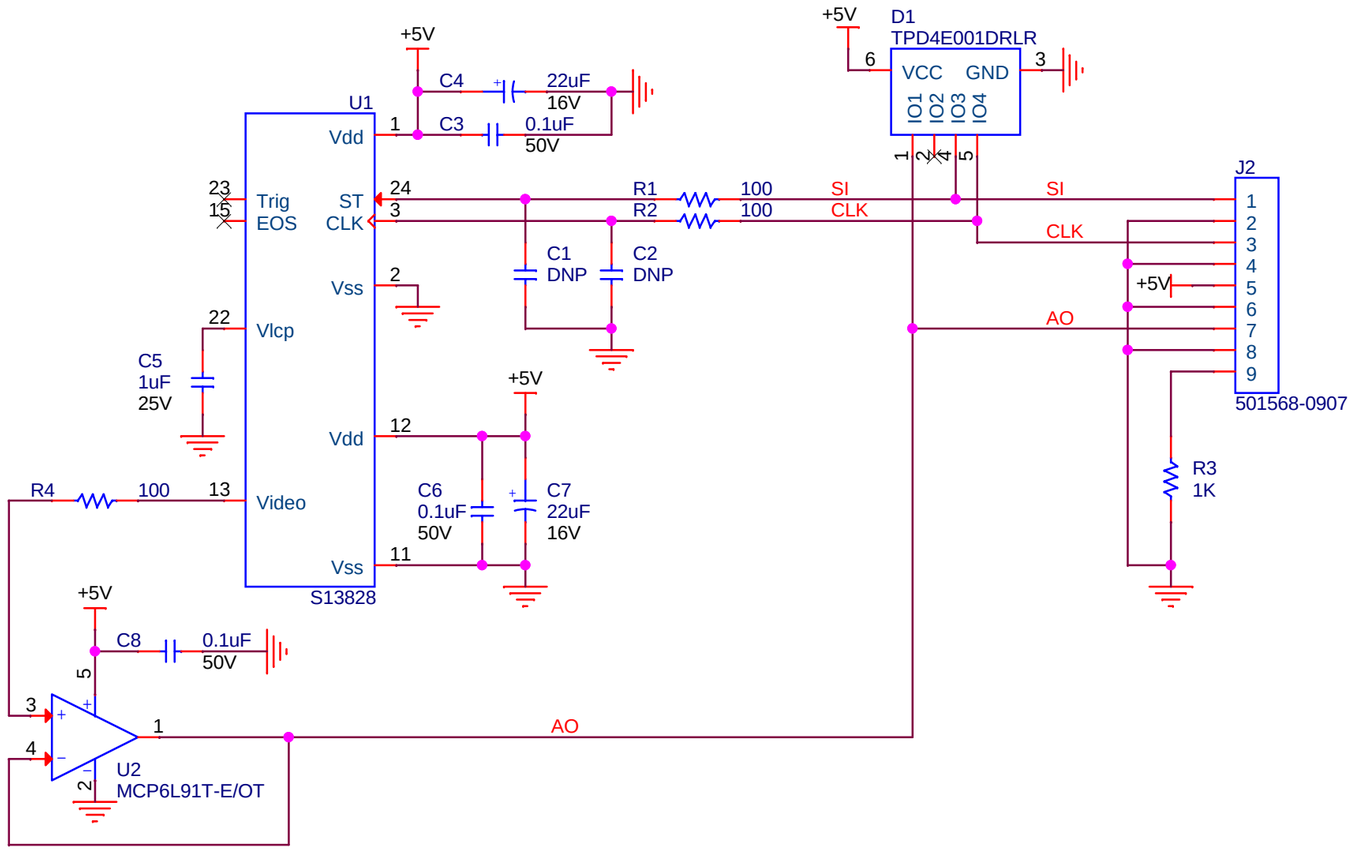

Note:

Ethernet cable wires are connected to the pin numbers below. The cable is manufactured according to T-568B.

J2 to 7819-0103 Connection Table	
Pin #	Wire Color
1	Orange
2	Orange/White
3	Blue
4	Blue/White
5	Green
6	Green/White
7	Brown
8	Brown/White
9	Braid/Drain Wire

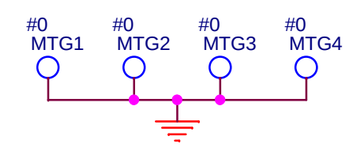

Released 06/30/2017 TGB

Creare
16 Great Hollow Road
Hanover, NH 03755

TITLE Droplet II - Sensor			
SIZE A	CAGE NO. 8A287	DOC. NO. 7819-0021	REV C
DRAWN BY TGB/WHF		ECO <ECO>	
DATE Friday, June 30, 2017		SHEET 1 OF 1	

THIS DRAWING IS PROPRIETARY AND IS CONSIDERED CONFIDENTIAL.

NO REPRODUCTION MAY BE MADE WITHOUT WRITTEN PERMISSION FROM CREARE.