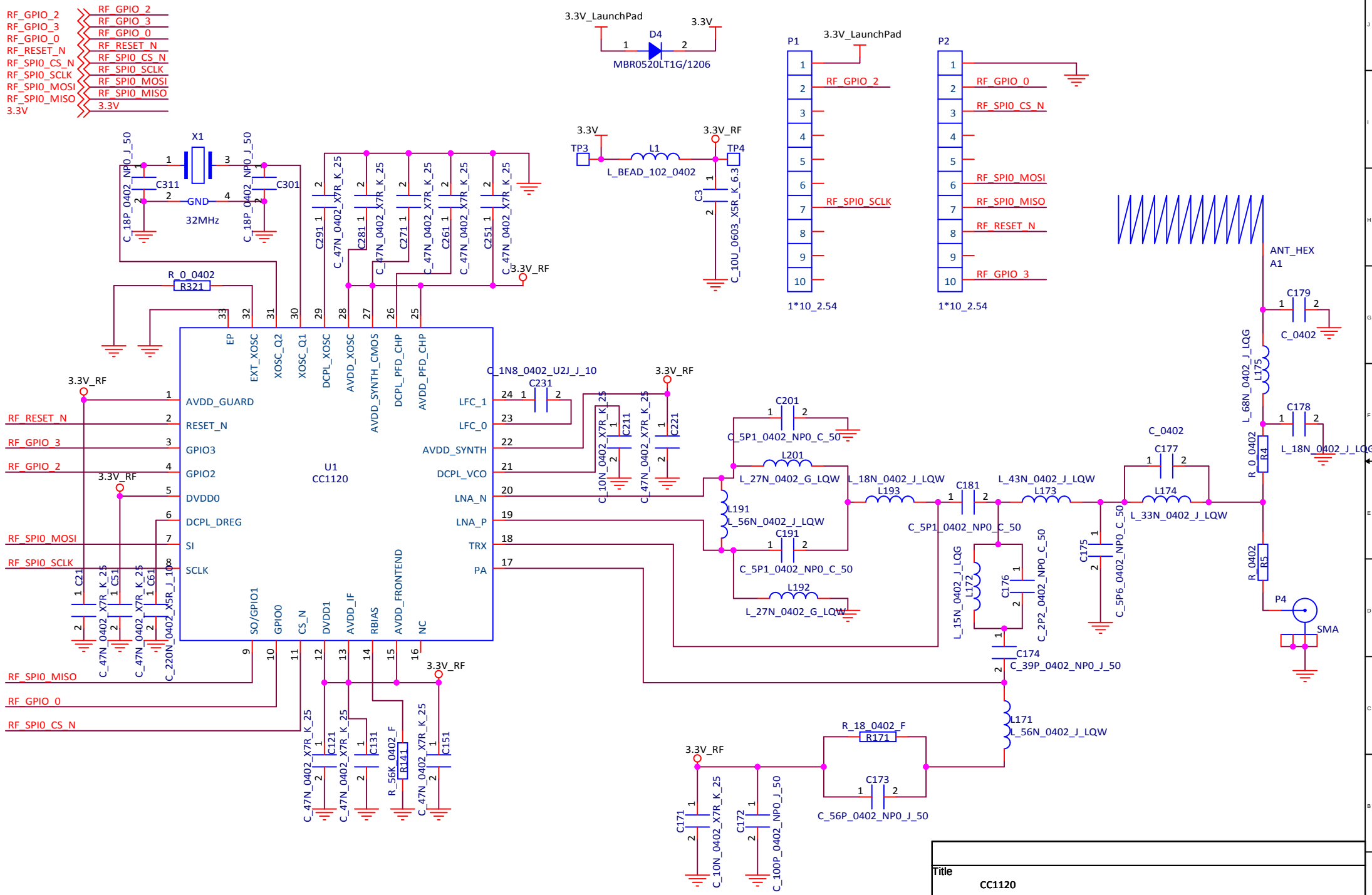

Title	CC1120		
Size A4	Document Number 091		Rev <RevC
Date: Friday, May 10, 2013		Sheet 1 of 2	

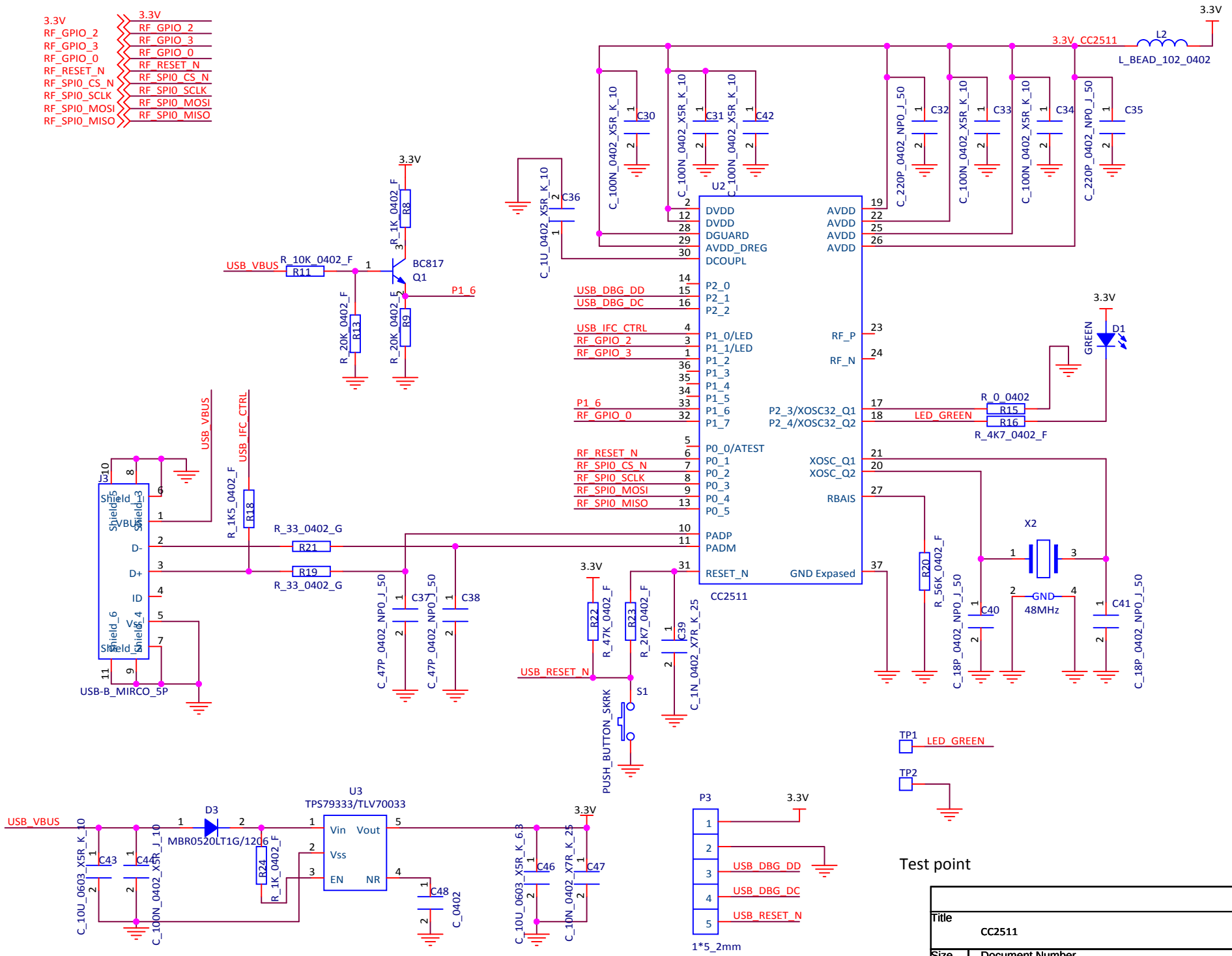

Title	CC2511	
Size A4	Document Number <091>	Rev <RevC
Date: Thursday, May 09, 2013	Sheet 2 of 2	