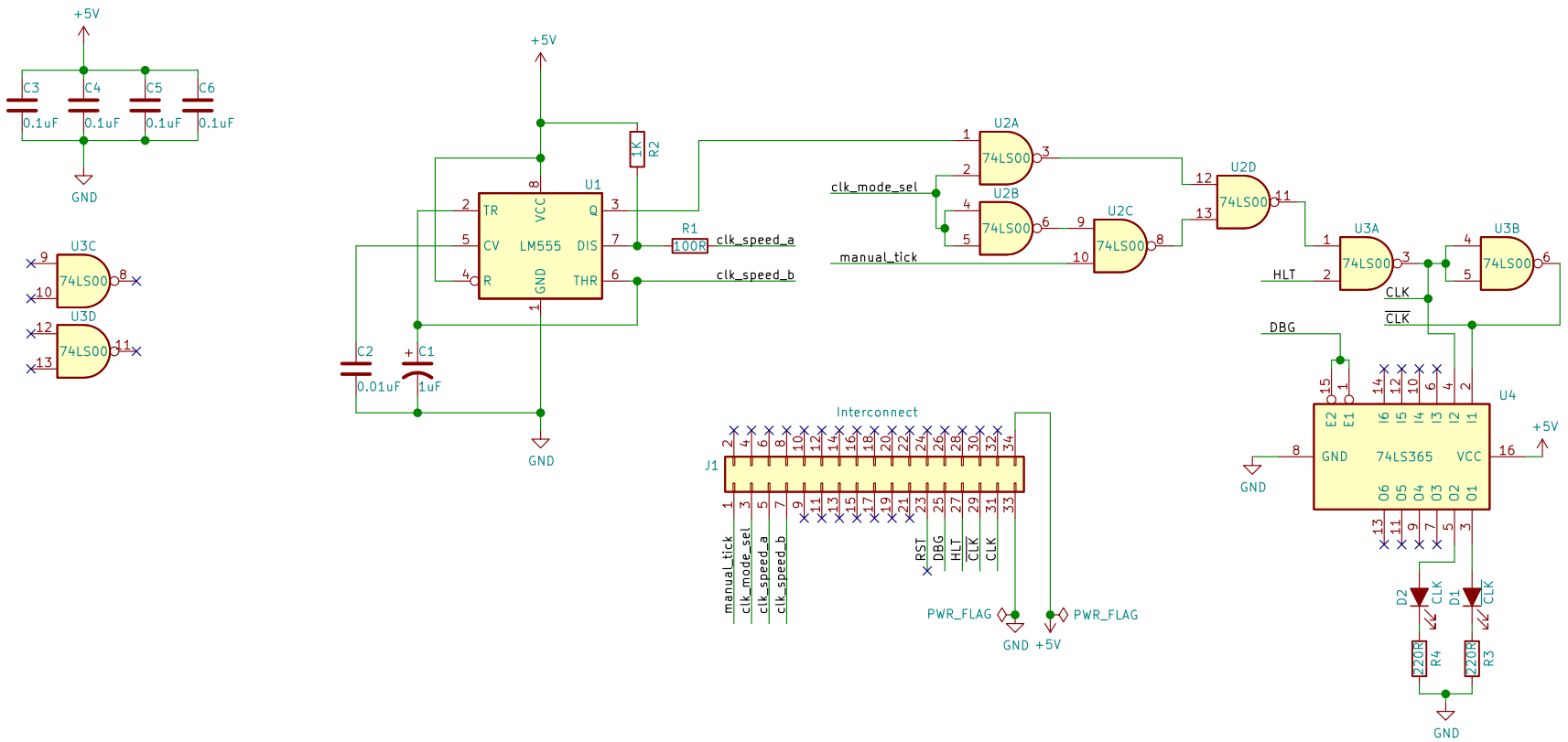

Sheet: /
File: TimerModule.sch

Title: Debug Timer

Size: USLetter	Date: 2020-04-06	Rev: 1.0
KiCad E.D.A. eeschema (5.1.5)-3		Id: 1/1