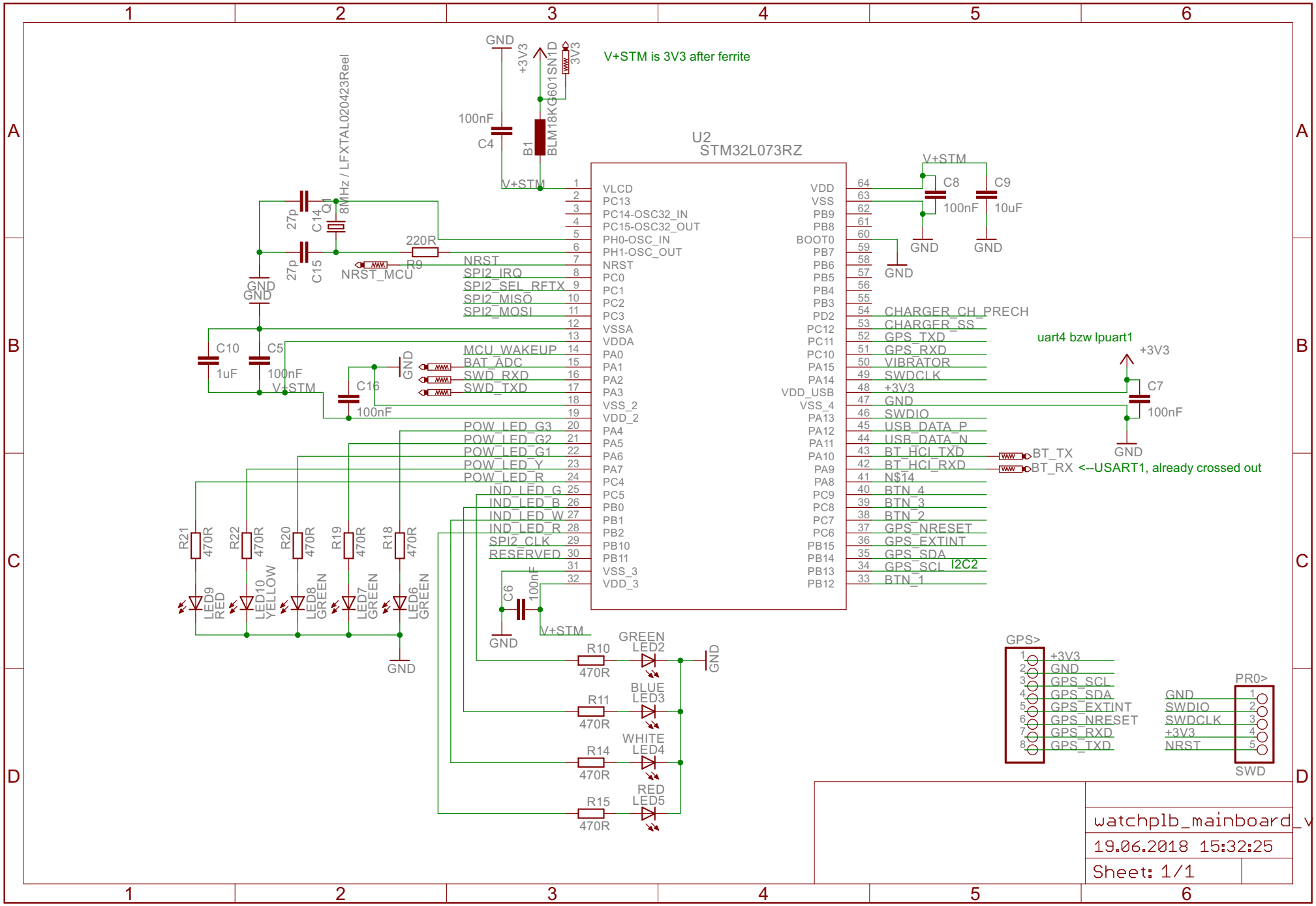

19.06.2018 15:37:23 f=1.02 C:\Users\samue\Documents\watchPLB\eagle\Mainboard\watchplb_mainboard_v1_1.sch (Sheet: 1/1)

USB Virtual COM Port

mit USB-to-UART Chip

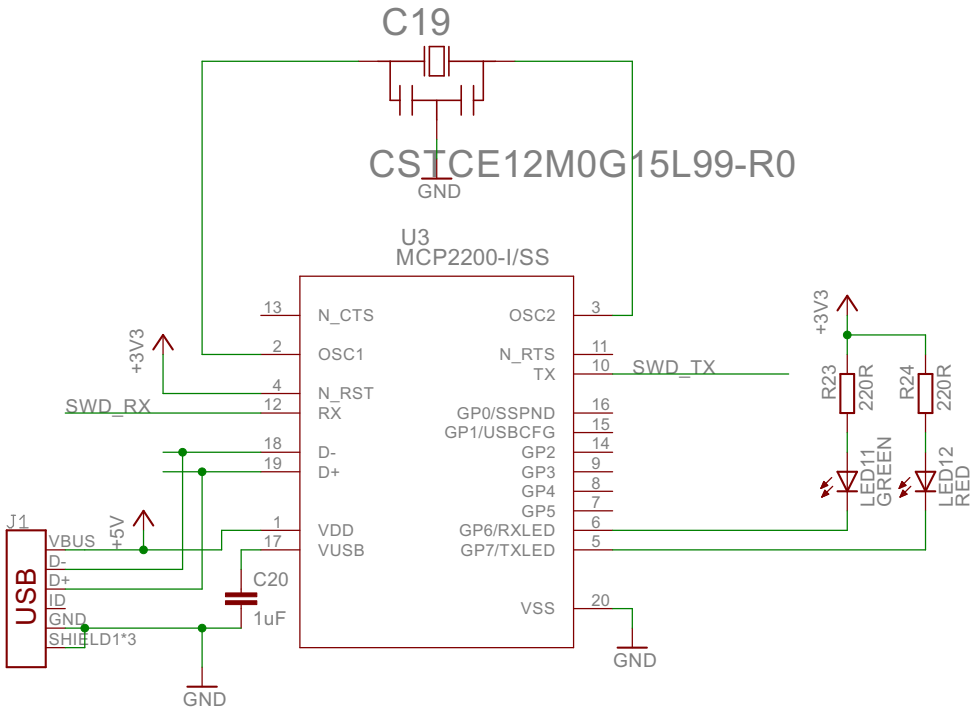

mit USB des STM

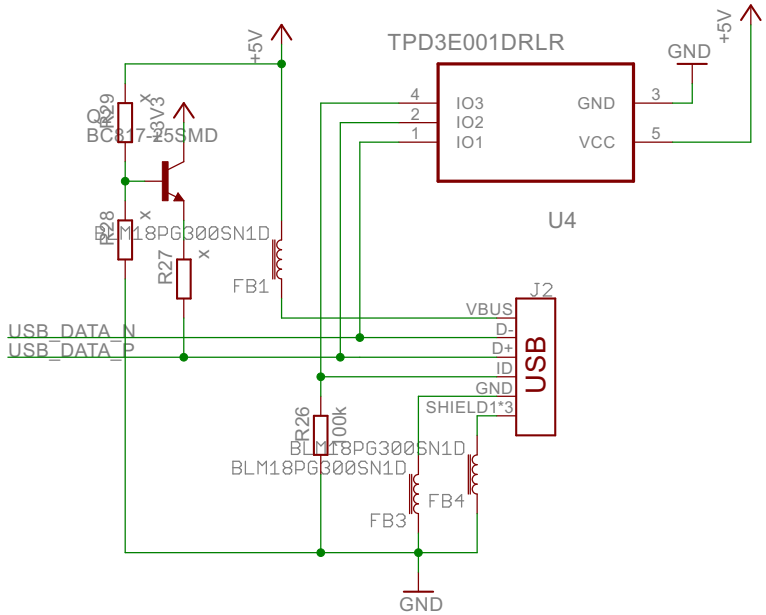

watchplb_mainboard_v1_1

19.06.2018 15:32:25

Sheet: 1/1

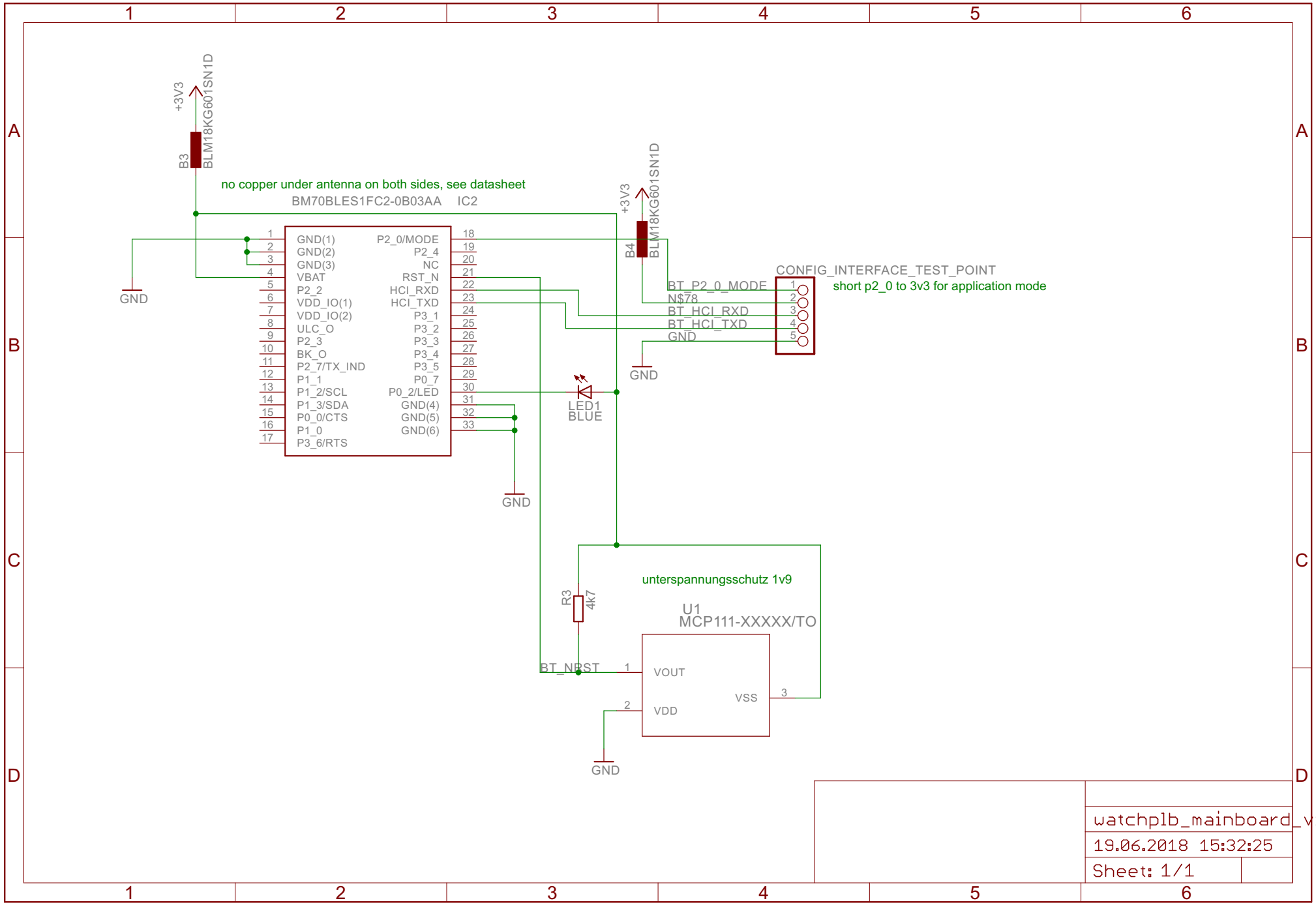
+3V3
BLM18KG601SN1D
B3
no copper under antenna on both sides, see datasheet
BM70BLES1FC2-0B03AA IC2
GND(1)
GND(2)
GND(3)
VBAT
P2_2
VDD_IO(1)
VDD_IO(2)
ULC_O
P2_3
BK_O
P2_7/TX_IND
P1_1
P1_2/SCL
P1_3/SDA
P0_0/CTS
P1_0
P3_6/RTS
P2_0/MODE
P2_4
NC
RST_N
HCI_RXD
HCI_TXD
P3_1
P3_2
P3_3
P3_4
P3_5
P0_7
P0_2/LED
GND(4)
GND(5)
GND(6)
GND
+3V3
BLM18KG601SN1D
B4
CONFIG_INTERFACE_TEST_POINT
short p2_0 to 3v3 for application mode
BT_P2_0_MODE
N$78
BT_HCI_RXD
BT_HCI_TXD
GND
GND
LED1
BLUE
GND
unterspannungsschutz 1v9
R3
4k7
U1
MCP111-XXXXX/TO
BT_NRST
VOUT
VDD
VSS
GND
watchplb_mainboard_v1_1
19.06.2018 15:32:25
Sheet: 1/1

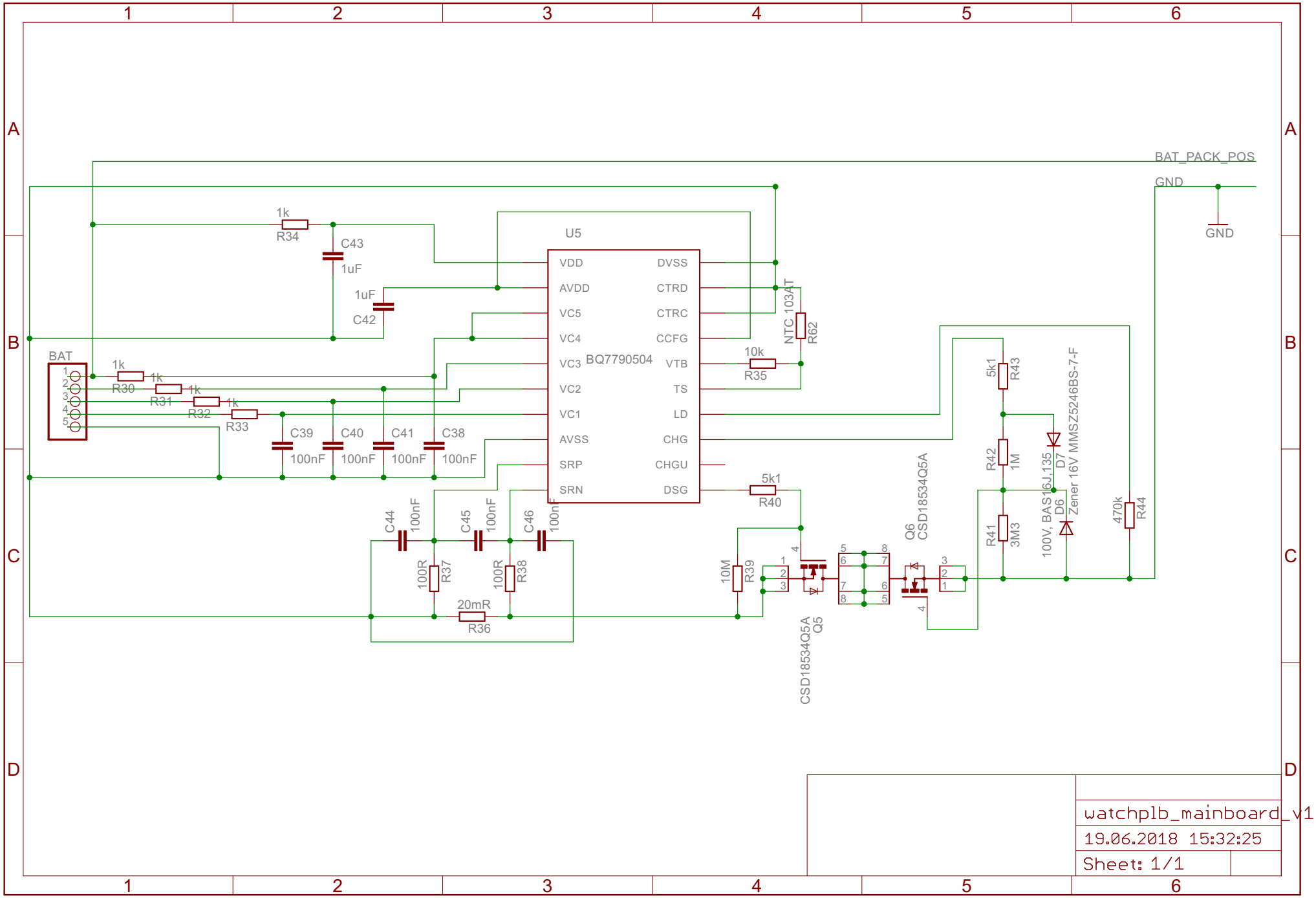

watchplb_mainboard_v1_1

19.06.2018 15:32:25

Sheet: 1/1

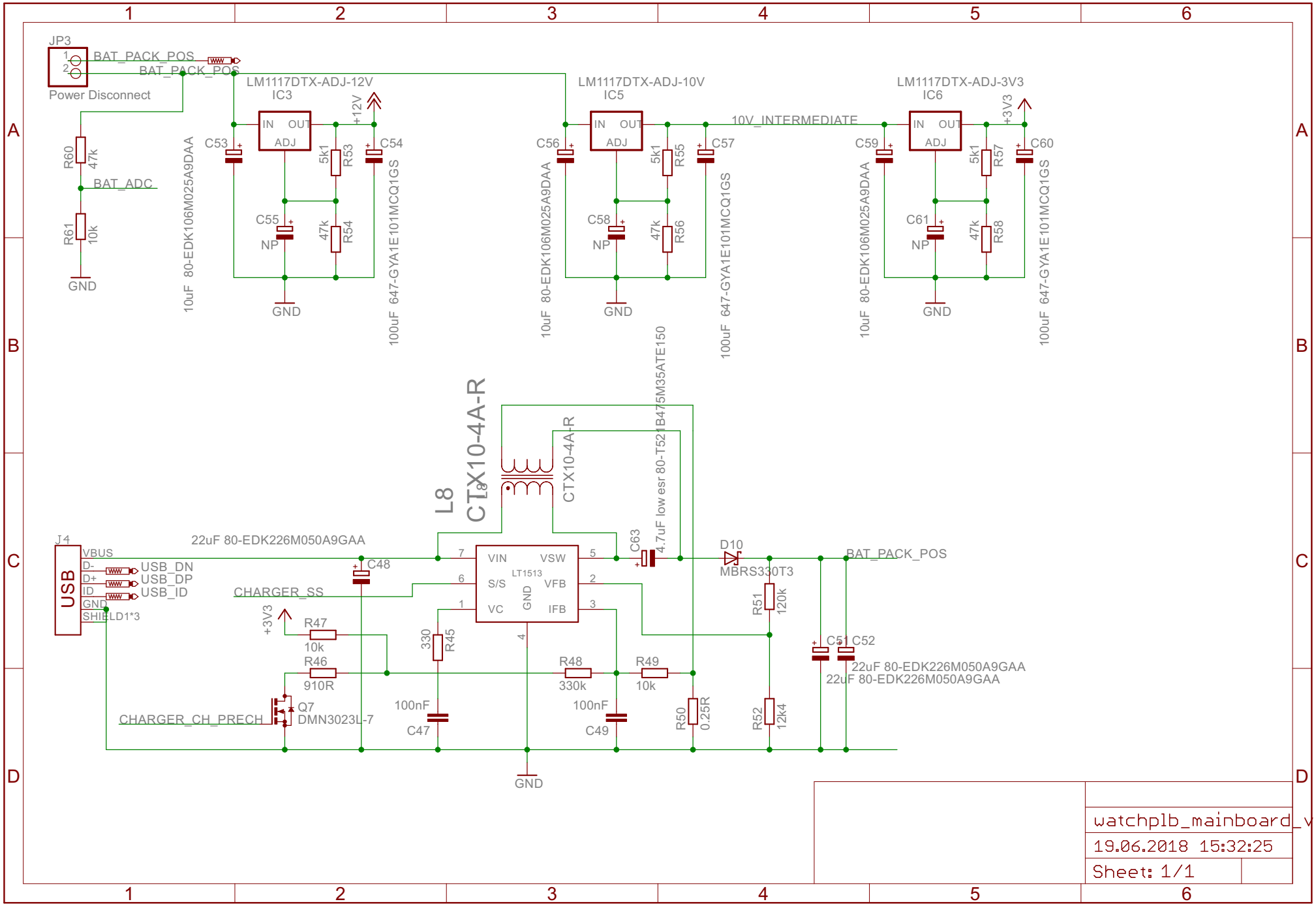
JP3
BAT_PACK_POS
BAT_PACK_POS
Power Disconnect
R60 47k
BAT_ADC
R61 10k
GND
LM1117DTX-ADJ-12V
IC3
IN OUT
ADJ
+12V
C53
10uF 80-EDK106M025A9DAA
C54
100uF 647-GYA1E101MCQ1GS
5k1 R53
47k R54
C55 NP
GND
LM1117DTX-ADJ-10V
IC5
C56
10uF 80-EDK106M025A9DAA
C57
100uF 647-GYA1E101MCQ1GS
5k1 R55
47k R56
C58 NP
10V_INTERMEDIATE
LM1117DTX-ADJ-3V3
IC6
+3V3
C59
10uF 80-EDK106M025A9DAA
C60
100uF 647-GYA1E101MCQ1GS
5k1 R57
47k R58
C61 NP
L8
CTX10-4A-R
CTX10-4A-R
B475M35ATE150
J4
USB
VBUS
D-
D+
ID
GND
SHIELD1*3
USB_DN
USB_DP
USB_ID
22uF 80-EDK226M050A9GAA
C48
CHARGER_SS
+3V3
R47 10k
R46 910R
Q7
DMN3023L-7
CHARGER_CH_PRECH
LT1513
VIN
VSW
S/S
VFB
VC
GND
IFB
330 R45
100nF C47
R48 330k
R49 10k
100nF C49
C63 4.7uF low esr 80-T521
D10
MBRS330T3
BAT_PACK_POS
R51 120k
R52 12k4
R50 0.25R
C51 C52
22uF 80-EDK226M050A9GAA
22uF 80-EDK226M050A9GAA
watchplb_mainboard_v1_1
19.06.2018 15:32:25
Sheet: 1/1

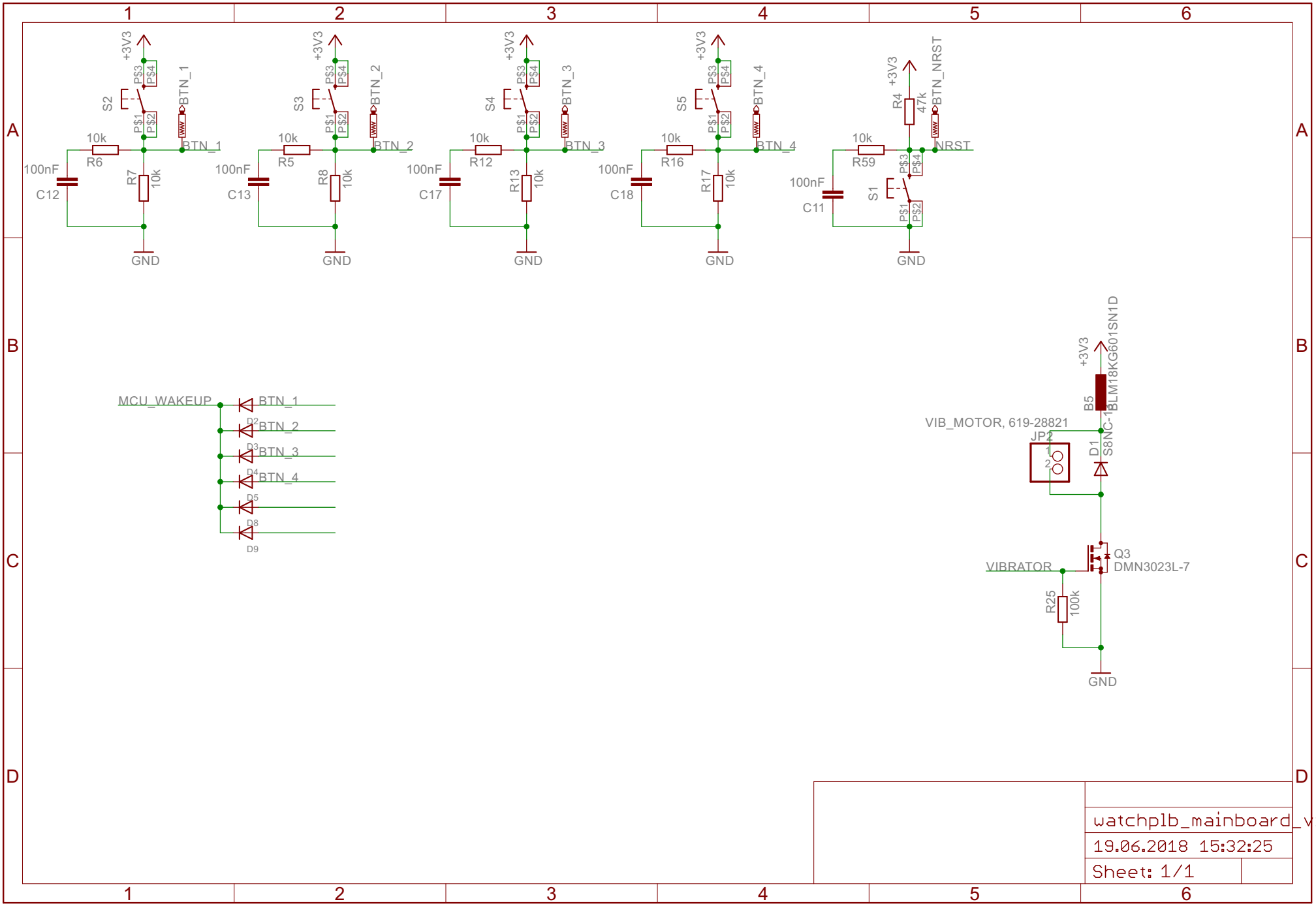
+3V3
S2
P$3
P$4
P$1
P$2
BTN_1
10k
R6
100nF
C12
R7
10k
GND
S3
BTN_2
R5
C13
R8
S4
BTN_3
R12
C17
R13
S5
BTN_4
R16
C18
R17
R4
47k
BTN_NRST
R59
NRST
C11
S1
MCU_WAKEUP
D2
D3
D4
D5
D8
D9
B5
BLM18KG601SN1D
VIB_MOTOR, 619-28821
JP2
D1
S8NC-1
Q3
DMN3023L-7
VIBRATOR
R25
100k
watchplb_mainboard_v1_1
19.06.2018 15:32:25
Sheet: 1/1

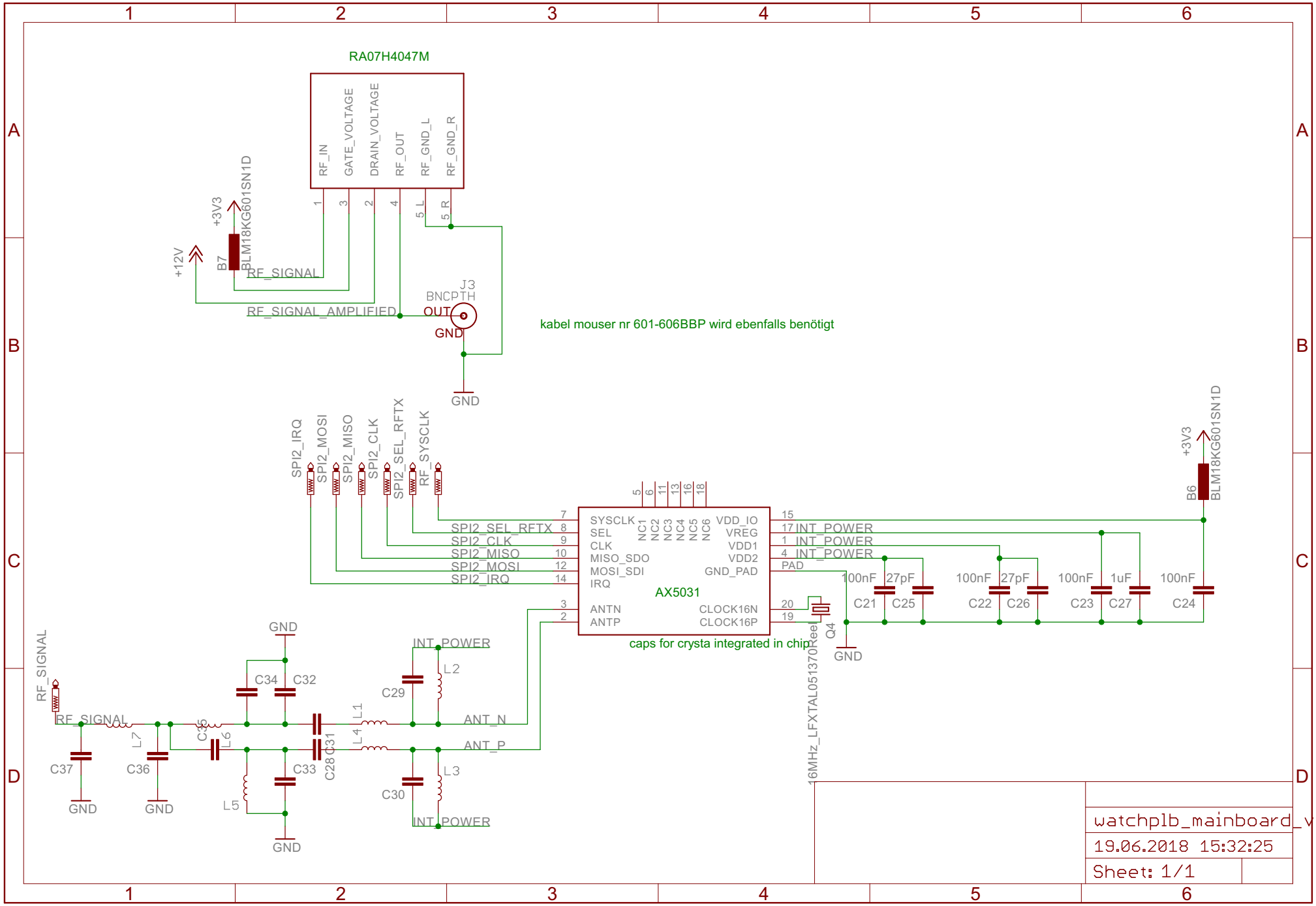
RA07H4047M
RF_IN
GATE_VOLTAGE
DRAIN_VOLTAGE
RF_OUT
RF_GND_L
RF_GND_R
+3V3
BLM18KG601SN1D
B7
+12V
RF_SIGNAL
RF_SIGNAL_AMPLIFIED
J3
BNCPTH
OUT
GND
kabel mouser nr 601-606BBP wird ebenfalls benötigt
SPI2_IRQ
SPI2_MOSI
SPI2_MISO
SPI2_CLK
SPI2_SEL_RFTX
RF_SYSCLK
SYSCLK
SEL
CLK
MISO_SDO
MOSI_SDI
IRQ
ANTN
ANTP
NC1
NC2
NC3
NC4
NC5
NC6
VDD_IO
VREG
VDD1
VDD2
GND_PAD
PAD
AX5031
CLOCK16N
CLOCK16P
INT_POWER
B6
100nF
27pF
1uF
C21
C22
C23
C24
C25
C26
C27
Q4
16MHz_LFXTAL051370Reel
caps for crysta integrated in chip
RF_SIGNAL
C34
C32
C29
L2
L1
L4
L3
C30
C31
C28
C33
C35
L6
L7
L5
C37
C36
ANT_N
ANT_P
watchplb_mainboard_v1_1
19.06.2018 15:32:25
Sheet: 1/1