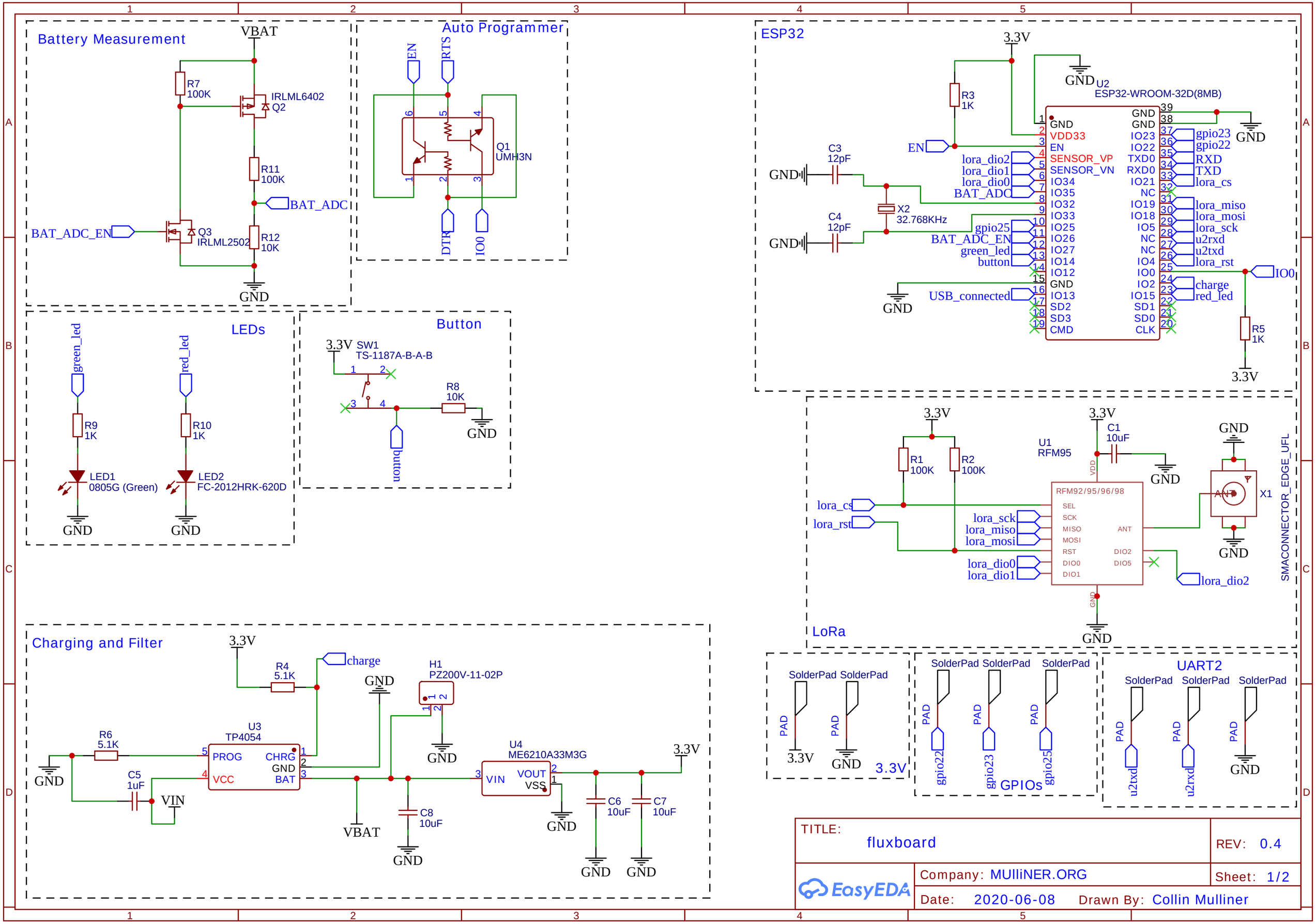
Battery Measurement
VBAT
R7
100K
IRLML6402
Q2
R11
100K
BAT_ADC
BAT_ADC_EN
Q3
IRLML2502
R12
10K
GND
Auto Programmer
EN
RTS
Q1
UMH3N
DTR
IO0
LEDs
green_led
red_led
R9
1K
R10
1K
LED1
0805G (Green)
LED2
FC-2012HRK-620D
GND
Button
3.3V
SW1
TS-1187A-B-A-B
R8
10K
button
Charging and Filter
3.3V
R4
5.1K
charge
GND
H1
PZ200V-11-02P
R6
5.1K
U3
TP4054
PROG
VCC
CHRG
GND
BAT
C5
1uF
VIN
VBAT
C8
10uF
U4
ME6210A33M3G
VIN
VOUT
VSS
C6
10uF
C7
10uF
ESP32
R3
1K
U2
ESP32-WROOM-32D(8MB)
C3
12pF
C4
12pF
X2
32.768KHz
lora_dio2
lora_dio1
lora_dio0
BAT_ADC
gpio25
BAT_ADC_EN
green_led
button
USB_connected
gpio23
gpio22
RXD
TXD
lora_cs
lora_miso
lora_mosi
lora_sck
u2rxd
u2txd
lora_rst
IO0
charge
red_led
R5
1K
LoRa
R1
100K
R2
100K
U1
RFM95
C1
10uF
RFM92/95/96/98
SEL
SCK
MISO
MOSI
RST
DIO0
DIO1
ANT
DIO2
DIO5
X1
SMACONNECTOR_EDGE_UFL
lora_dio2
SolderPad
PAD
UART2
u2rxd
u2rxd
GPIOs
gpio22
gpio23
gpio25
TITLE:
fluxboard
REV: 0.4
Company: MULliNER.ORG
Sheet: 1/2
Date: 2020-06-08
Drawn By: Collin Mulliner
EasyEDA

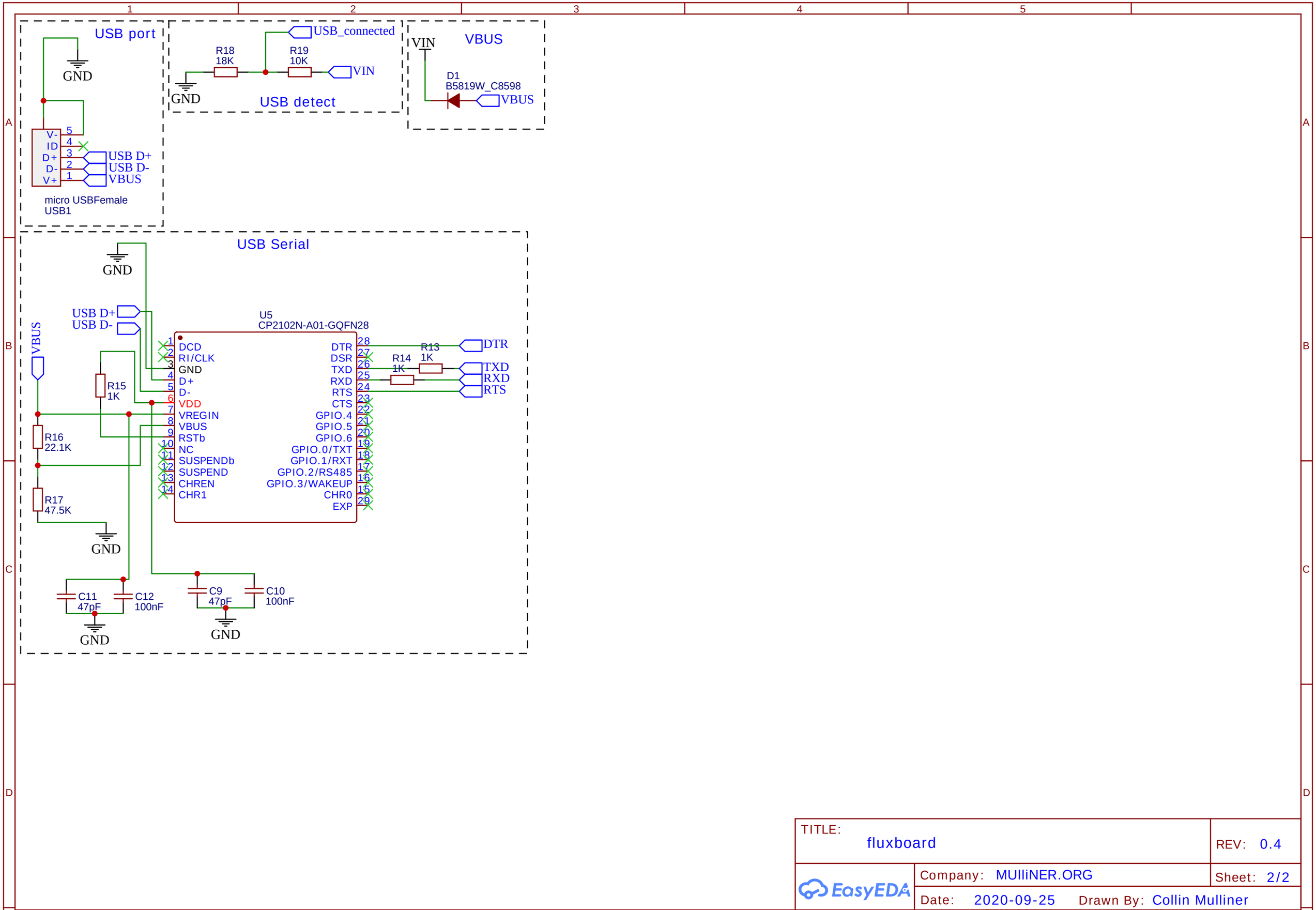

TITLE: fluxboard		REV: 0.4
EasyEDA	Company: MUlliNER.ORG	Sheet: 2/2
	Date: 2020-09-25 Drawn By: Collin Mulliner	