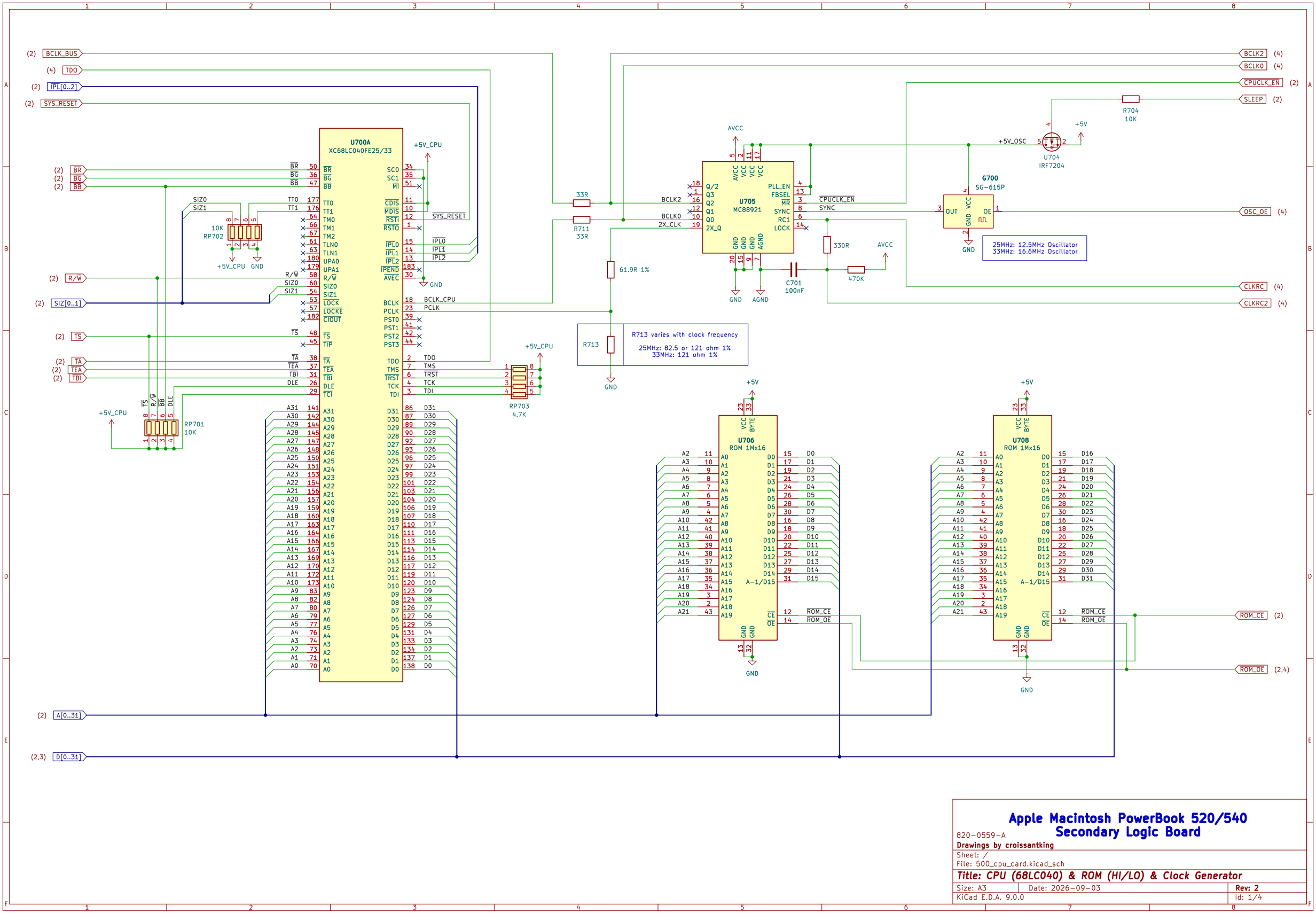

Apple Macintosh PowerBook 520/540
Secondary Logic Board

820-0559-A

Drawings by croissantking

Sheet: /

File: 500_cpu_card.kicad_sch

Title: CPU (68LC040) & ROM (HI/LO) & Clock Generator

Size: A3	Date: 2026-09-03	**Rev: 2**
KiCad E.D.A. 9.0.0		Id: 1/4

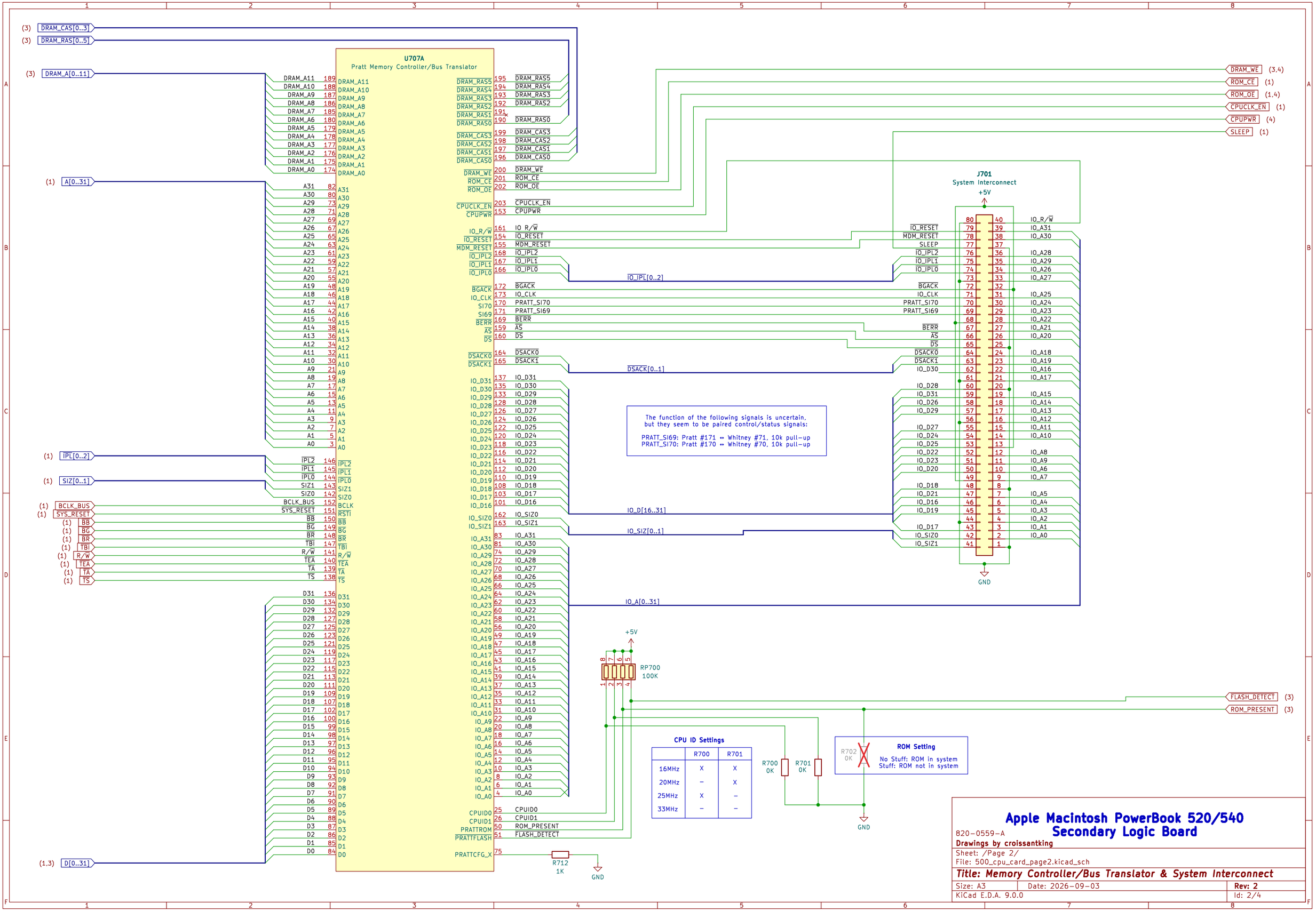
U707A
Pratt Memory Controller/Bus Translator
J701
System Interconnect
+5V
GND
RP700
100K
R712
1K
R700
0K
R701
0K
R702
0K
CPU ID Settings
R700 R701
16MHz X X
20MHz – X
25MHz X –
33MHz – –
ROM Setting
No Stuff: ROM in system
Stuff: ROM not in system
The function of the following signals is uncertain,
but they seem to be paired control/status signals:
PRATT_SI69: Pratt #171 ↔ Whitney #71, 10k pull-up
PRATT_SI70: Pratt #170 ↔ Whitney #70, 10k pull-up
IO_IPL[0..2]
DSACK[0..1]
IO_D[16..31]
IO_SIZ[0..1]
IO_A[0..31]
Apple Macintosh PowerBook 520/540
Secondary Logic Board
820-0559-A
Drawings by croissantking
Sheet: /Page 2/
File: 500_cpu_card_page2.kicad_sch
Title: Memory Controller/Bus Translator & System Interconnect
Size: A3
Date: 2026-09-03
Rev: 2
KiCad E.D.A. 9.0.0
Id: 2/4

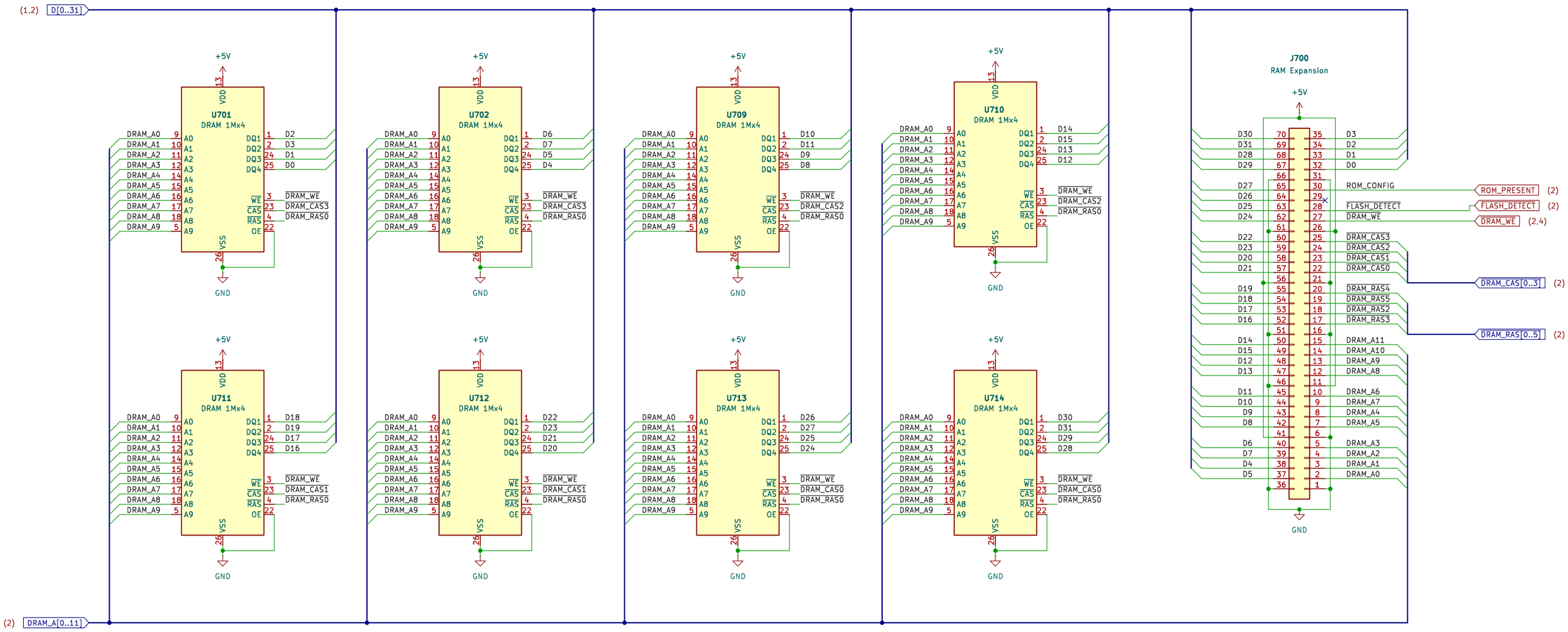

Apple Macintosh PowerBook 520/540
Secondary Logic Board

820-0559-A

Drawings by croissantking

Sheet: /Page 3/
File: 500_cpu_card_page3.kicad_sch

Title: Built-In DRAM & Expansion Slot

Size: A3	Date: 2026-09-03	**Rev: 2**
KiCad E.D.A. 9.0.0		Id: 3/4

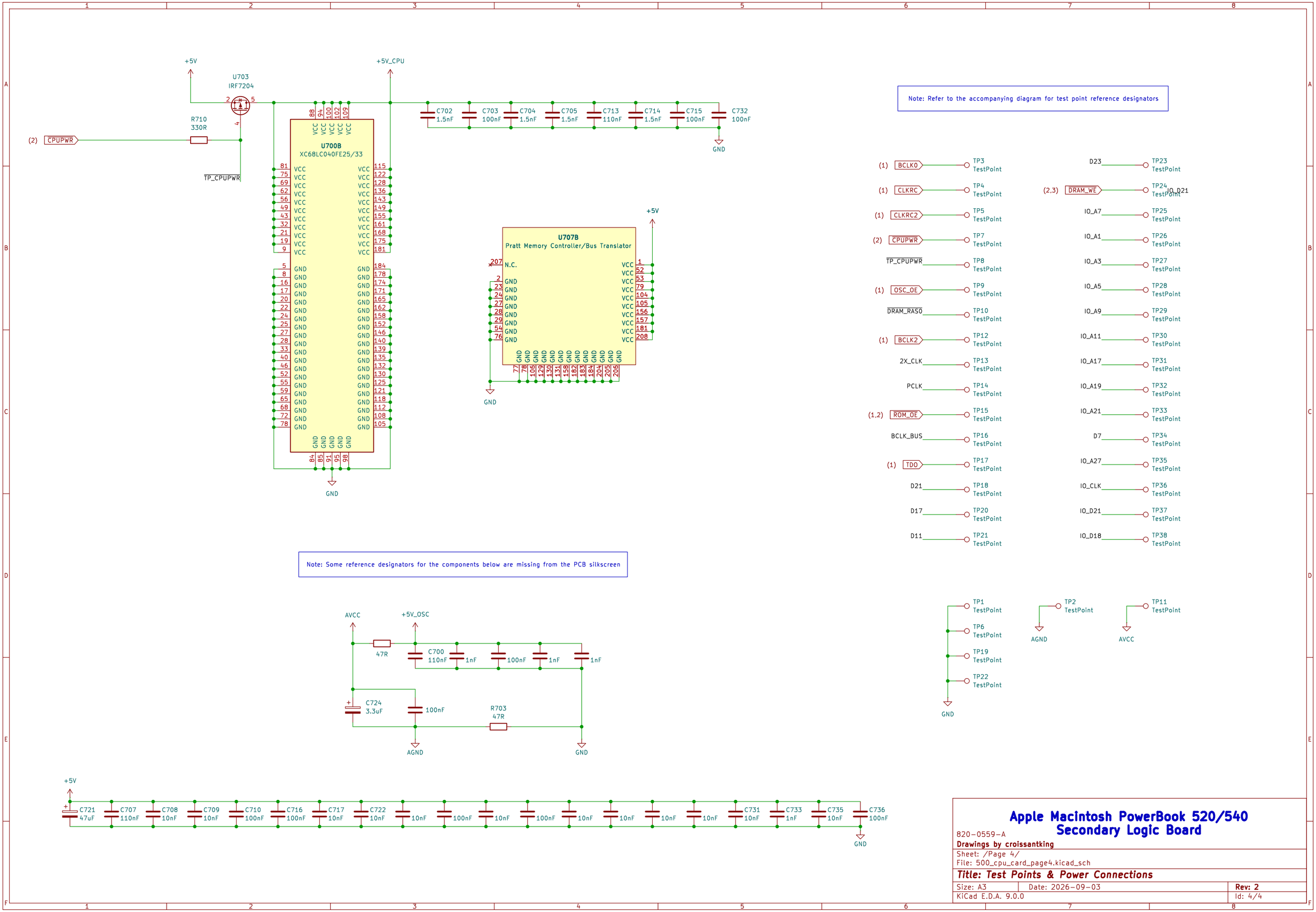

Apple Macintosh PowerBook 520/540 Secondary Logic Board

820-0559-A

Drawings by croissantking

Sheet: /Page 4/

File: 500_cpu_card_page4.kicad_sch

Title: Test Points & Power Connections

Size: A3	Date: 2026-09-03	**Rev: 2**
KiCad E.D.A. 9.0.0		Id: 4/4