Automotive Technology

Automotive E/E Systems Laboratory

Hochschule Karlsruhe
Technik und Wirtschaft
UNIVERSITY OF APPLIED SCIENCES

Experiment 1

Name	Hassan All-Faiz Bin Mohamed Ahmed (HB17031)
Group Number	
Date	18/8/2020

1 Reflections at open wire ends

This experiment aims to make you familiar with the electrical processes that take place in the case of high frequencies on ordinary bus cables. The analysis focuses on the runtime of signals and the signals' reflections when lacking the adaption by a terminating resistor.

Be careful: Following this experiment, we are working, as usual in the case of bus systems, with very high frequencies. If ever you desire set up such an experiment on your own, be careful to keep the wire lengths as short as possible. Wire jungles on the breadboard are supposed to distort the experiment's result drastically!

Introduction

Answer the following questions. The videos available online might help you.

- Sketch the transfer function of the Schmitt trigger!

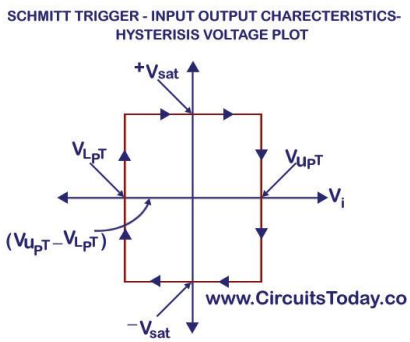

- Why is the Schmitt trigger useful for signal processing?

<u>The Schmitt trigger is useful for processing signals by applying a positive to a non-inverting input of an op-amp. Doing so can stabilize the output level when an input signal fluctuates</u>

- What are the switching thresholds of the 74LS14 used here? Find a datasheet on the web.

<u>The switching thresholds of the 74LS14 is to have an area where the output voltage will not change, even when strong noises in the input signal that enters the control unit will obtain clean output signal that can be better</u>

processed by microcontroller.

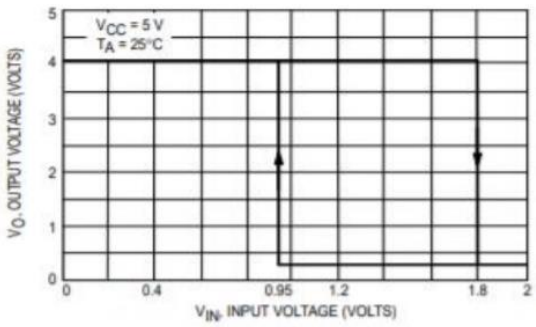

Figure 2. V_{IN} versus V_{OUT} Transfer Function

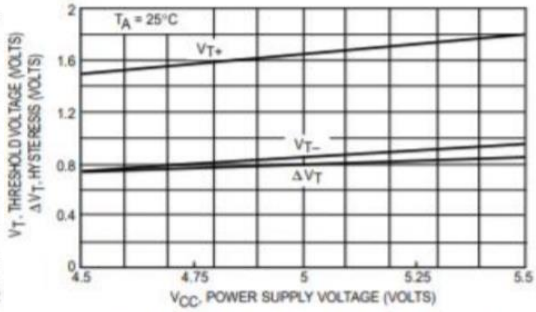

Figure 3. Threshold Voltage and Hysteresis versus Power Supply Voltage

- When the input voltage is below 0.95V, the Schmitt trigger will switch to high level which means the full output voltage of 4V
- If the input voltage rises to 1.8V, the Schmitt trigger will switch to low level
- When the input voltage is between 0.95V and 1.8V, hysteresis will take place where no switching occurs.

Recommended Operating Conditions

Symbol	Parameter	Min	Nom	Max	Units
V_{CC}	Supply Voltage	4.75	5	5.25	V
V_{T+}	Positive-Going Input Threshold Voltage (Note 2)	1.4	1.6	1.9	V
V_{T-}	Negative-Going Input Threshold Voltage (Note 2)	0.5	0.8	1	V
HYS	Input Hysteresis (Note 2)	0.4	0.8		V

Switching Characteristics

at V_{CC} = 5V and T_A = 25°C

Symbol	Parameter	R_L = 2 kΩ				Units
		C_L = 15 pF		C_L = 50 pF		
		Min	Max	Min	Max	
t_{PLH}	Propagation Delay Time LOW-to-HIGH Level Output	5	22	8	25	ns
t_{PHL}	Propagation Delay Time HIGH-to-LOW Level Output	5	22	10	33	ns

Datasheet retrieve from: https://www.futurlec.com/74LS/74LS14.shtml

1.1 Control unit

1.1.1 Setup

For this experiment, we set up a simple input stage for a control unit. Watch the video "Experiment 1.1.1" that explains the hardware when setup is completed. The input stage consists of two inverting Schmitt triggers placed in series.

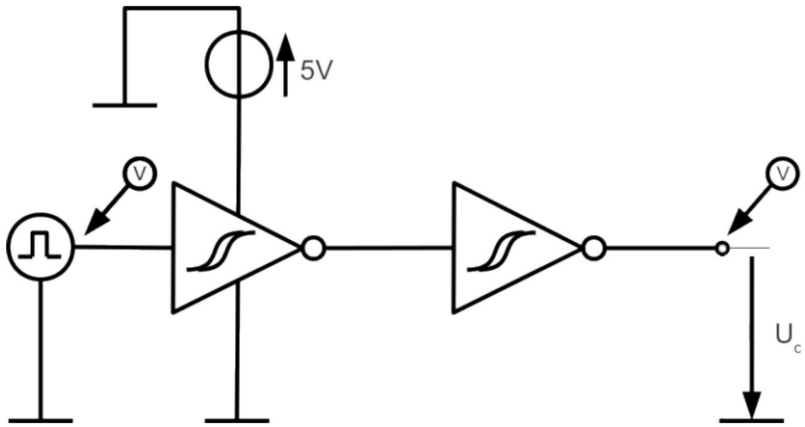

Figure 1.1: input stage for small control unit

- why do we place in series two inverted Schmitt triggers?
  Schmitt triggers placed in series to avoid having inverted signals since they produce inverted output signal

1.1.2 Data source

As usual for CAN and LIN networks, the logical values for "0" and "1" will be represented by different voltage levels. Therefore, an AC voltage in pulse form is set with the following values (see the video "Experiment 1.1.2"):

- f = 1MHz
- V_{pp} = 4V
- V_0 = 2V (Offset voltage)
- Duty cycle η = 20%

Now, watch the oscilloscope's display (video), showing many periods of the signal on the screen.

- What (periodical) bit sequence does the voltage correspond to?
  1-bit high level and 4-bits low level

- How many bits does a "data word" contain?
  A data word contains 5 Bits

- What is the level of the bit rate? (Note: The bit rate does *not* correspond to the generator's frequency!)
  5 bits x 1 MHz = 5MHz

1.1.3 Runtime in the control unit

Now the output of the control unit will be connected to another channel of the oscilloscope (please find corresponding information in the video).

- Specify the runtime of the signal Δt in the "control unit". Therefore, take note of the corresponding display in the video, showing the measurement by the use of the cursors.
  Runtime = 32ns is the time needed for the signal to pass thru the operational amplifier for once

- How many percent of the bit time is the signal edge's delay at the output of the "control unit"?
  About 22%

1.2 Control unit

1.2.1 Runtime in the control unit

Now we want to measure the speed of the bus signals' propagation in our system. Therefore, we need a signal edge that should be as sharp as possible.
The setting of the signal generator will be a pulse voltage with maximal amplitude, the signal should alternate between 0V and V_{max} with a frequency of 1MHz. In addition, a duty cycle that should be as short as possible will be set (you will find the settings in the video).

- What are the settings for amplitude, offset and duty cycle?
  Frequency = 1Mhz, Amplitude = 10 Vpp, Offset = 0Vdc , Min duty cycle = 4%

- What are the values of the signal that will be displayed on the oscilloscope's screen?
  The time needed by the signal to reflect from previous peak and the voltage amplitude: the high peaks are the output signals. The small peaks are not new peaks but reflection of the previous peak due to the open-ended wire with a delay.

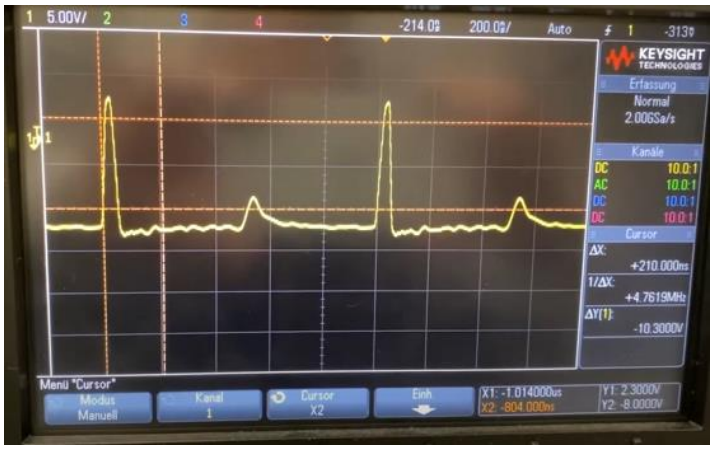

Now the bus cable will be connected to the output of the signal generator. The other end of the bus wire will be connected to the probes of the oscilloscope (find the setup in the video).

For the next measurement, take note of the values in the video. Read the runtime Δt between the peaks of the input signal and the reflected signal and write it down.

Δt = +508ns

Now the bus cable will be extended by a wire of 2 meters. Thereby, the reflected signal will

be slightly delayed. See the measurement of the difference in runtime Δt_1 between the original cable and the cable with extension (using the cursors of the oscilloscope's screen in the video).

Δt_1 = +528ns

Using the values of the last measurement, calculate the velocity c of the signal:

c = 3 x 10^8

Using the signal's velocity and the values of the first measurement, determine the length l of the bus cable:

l = 6m

1.2.2 Reflections and terminating resistor

Now the 2-meter-long wire will be removed from the bus's end and the open end will be short-circuited.

- How does the reflected signal behave, when the bus's end is short-circuited? Describe the behavior using the video!
  When short circuit, there should not be any difference in potential. But the internal resistance of the wire will influence the result. The reflected signal has been inverted

In order to avoid reflections on the cable, there must be an adaption using a terminating resistor. This terminating resistor must have the same value as the wave impedance of the cable.
Therefore, the end of the cable will be short-circuited by the potentiometer (5kΩ) integrated in the component (see the video). The potentiometer will be adjusted until the reflected wave is completely damped. Specify the potentiometer's resistance measured by the ohmmeter in the video.

R = 150 Ohm (the ohm does not correspond to the 120 ohm predicted bcoz we need to take into consideration of the tolerance and deviation as the wire is not the same as used in the vehicle)

- What do you conclude by observing this behavior, when it comes to work with high frequency signals on the CAN bus?
  Long wires will always produce a delayed reflected signal, it is only when there is a short circuit that there it will cause an it to be inverted. A terminating resistor can be use to avoid reflection occurring.

1.3 Control units on the bus

1.3.1 Highspeed CAN

A positive pulse voltage with T = 8µs and a pulse width of 1µs will be set on the signal generator. The values for "HiLevel" (4V) and "LoLevel" (0V) will be controlled (see the video).

- What is the data rate (bit/s) corresponding to this setting? – 1 Mbit/s
- What is the resulting bit sequence?
  The bit time increases by 50%, hence the output time signal of the control unit is 50% longer.

Now, the input of our "control unit" (input of the op-amp) will be connected to the function generator and the bus wire (draft in figure 1, for the real setup watch the video).

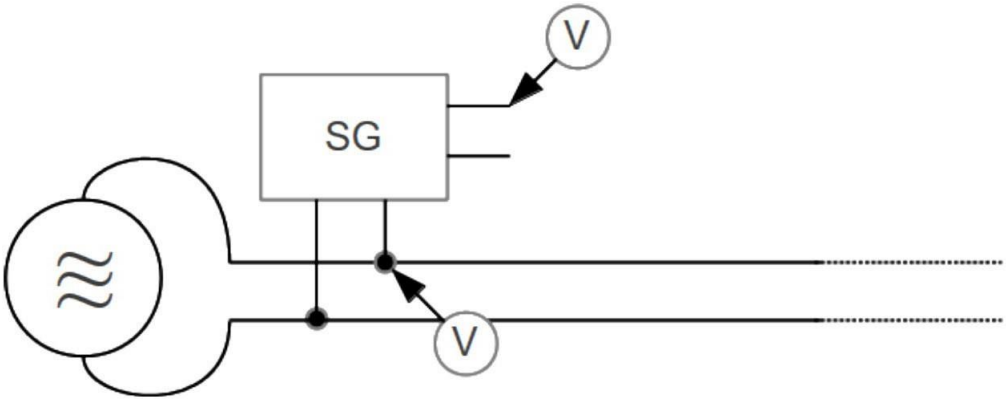

Figure 2: Connection of control unit and bus wire

The voltage level at the input side of the control unit (input of the op-amp) and at the output side of the control unit (output of the op-amp) will be measured using the oscilloscope (see in the video). Calculate the duty cycle on the bus.

- How does the duty cycle on the bus change when terminating the bus with a 120 Ω resistor?
  Duty cycle = (pulse width/ period) x 100 = 1us/8us = 12.5% (the duty cycle on the yellow signal occurs without any reflection)

- What would be the consequence for the receiver, if we dealt with real data on the bus?
  The control unit might send to the receiver two 1's instead of a single 1 which could reduce a bit error when transmitting.

- What is the conclusion you draw for the work with the highspeed CAN?
  It is important that the terminating resistor is present at one CAN bus as to avoid total breakdown of communication in the vehicle.

1.3.2 Lowspeed CAN

Now the settings on the function generator will be changed so that the same bit sequence as in the previous task is sent with 100 kBit/s. The measurement of the previous task (see figure 2) will be repeated using these values.

- What are the settings for time and pulse width that need to be made?

T = 80 us

Δt = 10 us

- How does the duty cycle on the bus change now when the bus is terminated with a 120 Ω resistor (see the video)?
  We will have a lower data rate. The yellow graph shown from the signal generator to the bus and the green signal corresponds to the output of the control unit. It has a very small impact on the oscilloscope screen (small delay of the green ooutput signal after the control unit)

- How can you explain the difference to the measurement with the highspeed CAN?
  Lowspeed CAN has a small affect on delay of the output signal compared to the Highspeed CAN.

- What is the conclusion you can draw for the work with the lowspeed CAN?
  In Lowspeed CAN has a limited effect on a real measurement. It does not produce a big bit error (in low single digit range) and terminating resistors doesn't have a major impact on the signals.