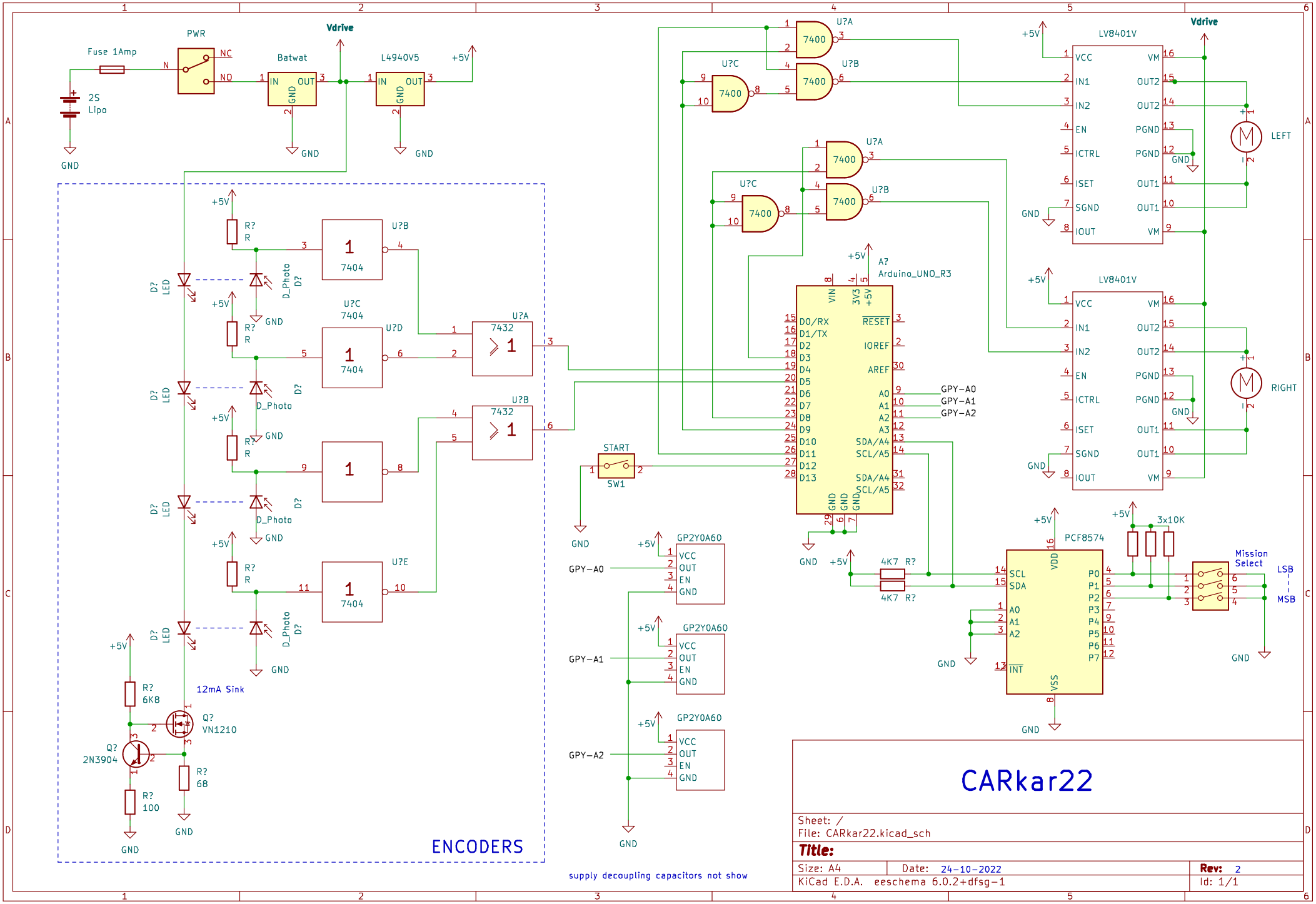
PWR
Fuse 1Amp
2S
Lipo
GND
Batwat
L4940V5
Vdrive
+5V
ENCODERS
12mA Sink
Q?
VN1210
2N3904
R?
6K8
68
100
R?
R
D?
LED
D_Photo
7404
7432
U?A
U?B
U?C
U?D
U?E
START
SW1
A?
Arduino_UNO_R3
GPY-A0
GPY-A1
GPY-A2
GP2Y0A60
VCC
OUT
EN
GND
4K7 R?
PCF8574
3x10K
Mission
Select
LSB
MSB
7400
LV8401V
LEFT
RIGHT
supply decoupling capacitors not show
CARkar22
Sheet: /
File: CARkar22.kicad_sch
Title:
Size: A4
Date: 24-10-2022
Rev: 2
KiCad E.D.A. eeschema 6.0.2+dfsg-1
Id: 1/1