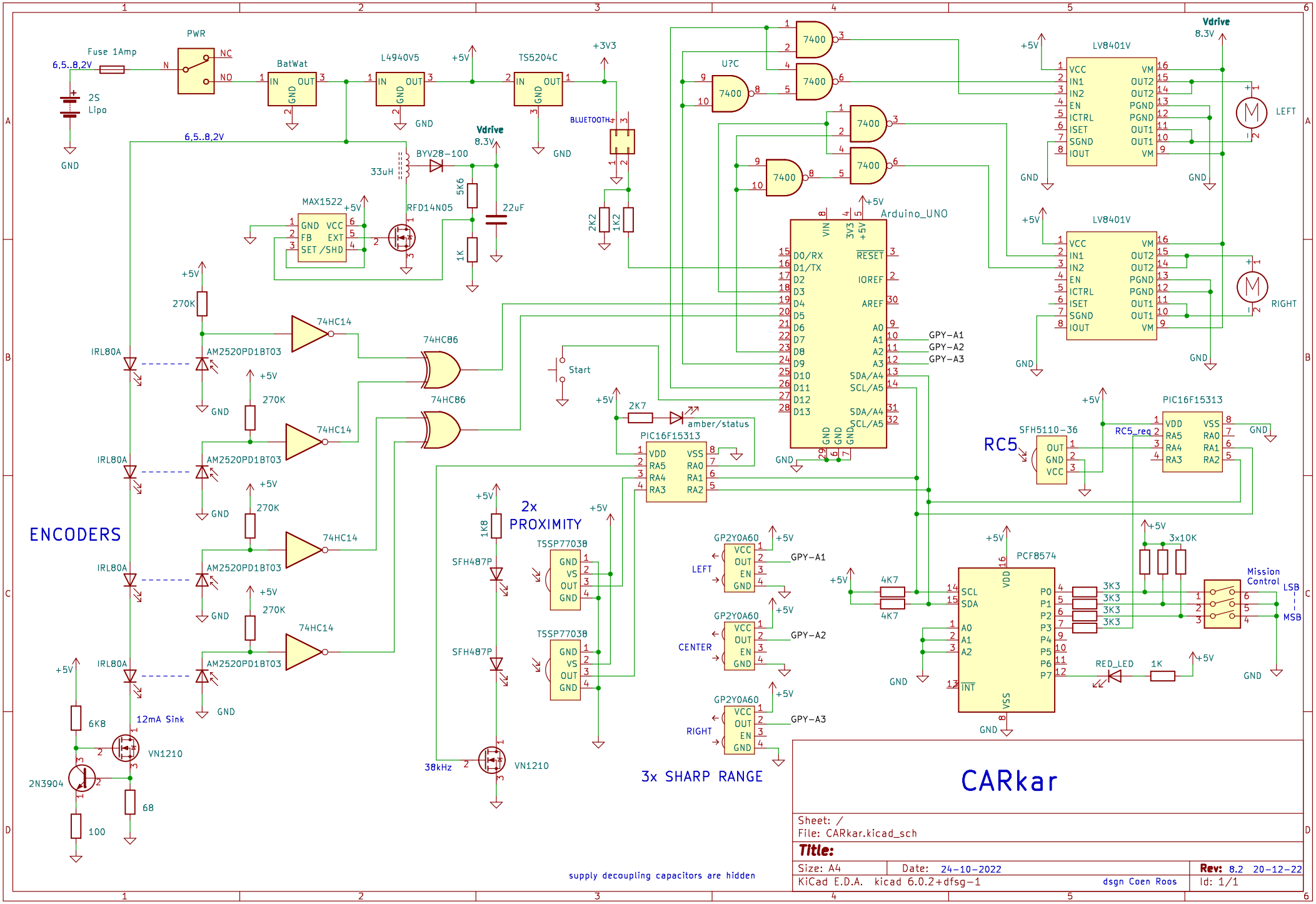
PWR
Fuse 1Amp
6,5..8,2V
2S
Lipo
GND
BatWat
L4940V5
TS5204C
+5V
+3V3
BLUETOOTH
Vdrive
8.3V
33uH
BYV28-100
5K6
22uF
1K
2K2
1K2
MAX1522
RFD14N05
U?C
7400
LV8401V
LEFT
RIGHT
Arduino_UNO
GPY-A1
GPY-A2
GPY-A3
Start
2K7
amber/status
PIC16F15313
SFH5110-36
RC5
RC5_req
ENCODERS
270K
74HC14
74HC86
IRL80A
AM2520PD1BT03
2x
PROXIMITY
1K8
SFH487P
TSSP77038
38kHz
VN1210
12mA Sink
6K8
2N3904
68
100
3x SHARP RANGE
GP2Y0A60
CENTER
4K7
PCF8574
3x10K
3K3
Mission
Control
LSB
MSB
RED_LED
1K
supply decoupling capacitors are hidden
CARkar
Sheet: /
File: CARkar.kicad_sch
Title:
Size: A4
Date: 24-10-2022
Rev: 8.2 20-12-22
KiCad E.D.A. kicad 6.0.2+dfsg-1
dsgn Coen Roos
Id: 1/1