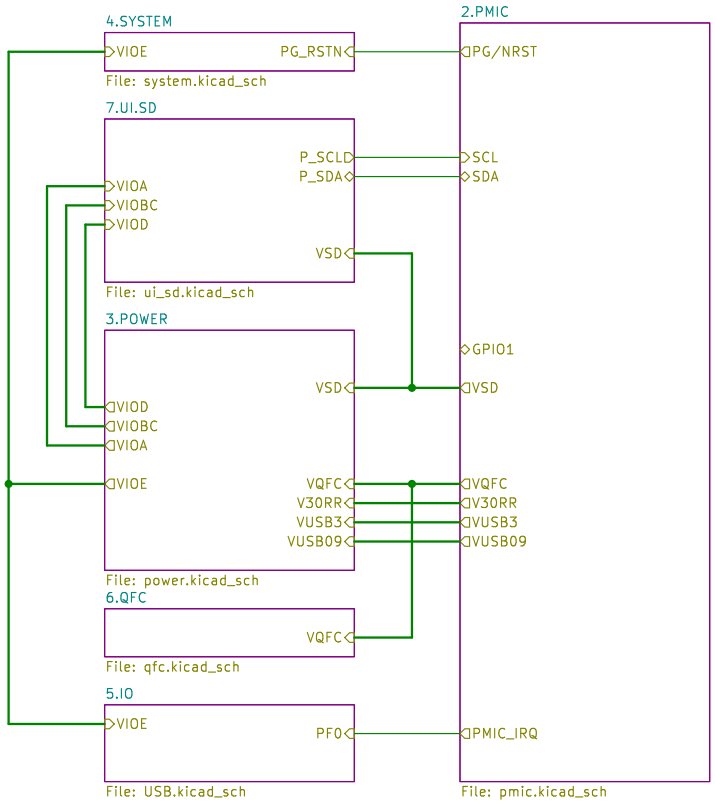

Battery and USB VBUS

```
USB VBUS -----> VMID <------ Batt
                  |           ^
                (SW5)         |
                  |        charger
                  V           |
                VSYS --------+
```

VSYS	DCDC1		3V4, VDD33 (PMU input, boot)
		DLDO1/DC1SW	SW 3V4, VSD
	DCDC2		0V8–0V95, VDD85D
		jumper	0V8–0V95, VDD85A, VDD85A_RRAM
	DCDC3		1V–3V6, experiment
	DCDC4		1V8
		DLDO2/DC4SW	SW 1V8, VQFC
		CPUSLDO	0V9, VDDUSB09
	DCDC5		3V6, ReRAM forming
VSYS	VRTC		3V0, AO
VSYS/DCDC1		BLDO1	unused
		BLDO2	unused
VSYS		ALDO1	3V0, VDDReRAM (boot)
		ALDO2	2V5, AVDD, ADC (boot)
		ALDO3	3V1, VUSB3
		ALDO4	0V9, PLL

Sheet: /
File: daric_evb.kicad_sch

Title:

Size: A4	Date:	**Rev:**
KiCad E.D.A. 9.0.1		Id: 1/7

Copyright © 2026 CrossBar, Inc.

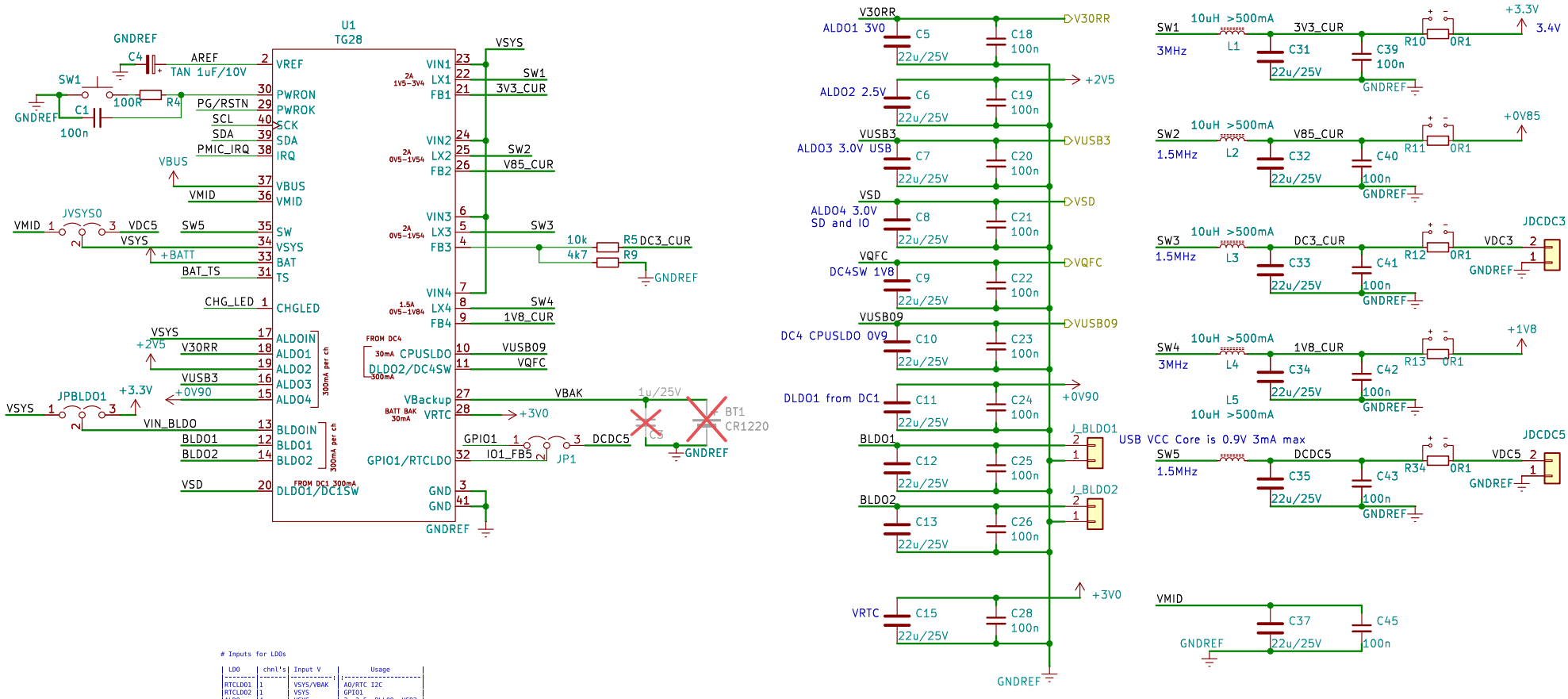

Inputs for LDOs

LDO	chnl's	Input V	Usage
RTCLDO1	1	VSYS/VBAK	AO/RTC I2C
RTCLDO2	1	VSYS	GPIO1
ALDO	4	VSYS	3, 2.5, PLL09, USB3
BLDO	2	selectable	unused
DLDO1	1	3V DCDC1	SW, SD
DLDO2	1	1.8V DCDC4	SW, QFC/Flash
CPUSLDO	1	1.8V DCDC4	VUSB09

Outputs of AXP2101/TG28

- DCDC5 buck, 3.6-3.7V, for ReRAM Forming
- VDDIO_E/VDD_TEST: select from ALDO1 or DCDC4
- $VDDIO_{AO,RTC,I}$: Select from ALDO1 or DCDC4
- Daric in sleep mode needs: VDD33(or VDDAO 0.8), and VDD33_AO
- Only AOXRST can wake up from PwrOFF mode.

Output	type	Default V	V range	VRegAddr	Seq	u	Cur	Usage
DCDC1	BUCK	3.3	1.5-3.4	82h	2	PMU	2000	boot 3V3 for PMU
DC1SW	Switch	OFF	= DCDC1	en: ??h	OFF	SD	400	SD, LCD?
DLDO1	LDO	NA	0.7-3.3	99h	NA	N/A	400	Use DC1SW
DCDC2	BUCK	0.85	0.5-1.54	83h	OFF	CPU	2000	boot Core 0V85(0V8-0V95)
DCDC3	BUCK	NA	0.5-1.54	84h	OFF	?	2000	unused for now
DCDC4	BUCK	1.8	0.5-1.84	85h	1	1.8V	1500	1.8V IO, DLDO2
DC4SW	Switch	OFF	= DCDC4	??h	OFF	N/A	200	QFC
DLDO2	LDO	NA	0.5-1.4	??h	NA	N/A	200	N/A, use DC4SW
CPUSLDO	LDO	0.9	0.7-1.4	98h	OFF	N/A	200	VUSB 0.9
DCDC5	BUCK	3.6	1.4-3.77	86h	OFF	RR	15007	ReRAM Forming
VRTC(28)	LDO	3.0	1.8/2.5/3/3.3		AON	RTC	30	VDD33_AO, VDD33 sleep
ALDO1	LDO	3.0	3.0(0.7-3.3)	92h	1	IO/RR	300	IO / ReRAM 3V
ALDO2	LDO	2.5	2.5(0.7-3.3)	93h	2	ANA	300	PLL, analog 2.5V
ALDO3	LDO		3.0(0.7-3.3)	94h	OFF	USB	200	VUSB 3V
ALDO4	LDO		3.0(0.7-3.3)	95h	OFF	PLL	200	PLL 0V9
BLDO1	LDO		3.0(0.7-3.3)	96h	OFF	N/A	200	(unused)
BLDO2	LDO		3.0(0.7-3.3)	97h	OFF	N/A	200	(unused)

List of Peripherals/Supplies

1. Daric: Core 0.9, PLL 0.9, ReRAM 1.6-3.0, IO 1.6-3.3, PMU 3.3
2. HyperBus/Flash, mostly 1.8
3. SD mostly 3.3
4. LCD, touchpad, 3V
5. USB 3.3 + 0.9
6. Camera 3.3 + 1.8?
7. Bluetooth/BLE 3.3
8. NFC 3.3

Sheet: /2.PMIC/
File: pmic.kicad_sch

Title:

Size: A4 | Date: | **Rev:**
KiCad E.D.A. 9.0.1 | Id: 2/7

Copyright © 2026 CrossBar, Inc.

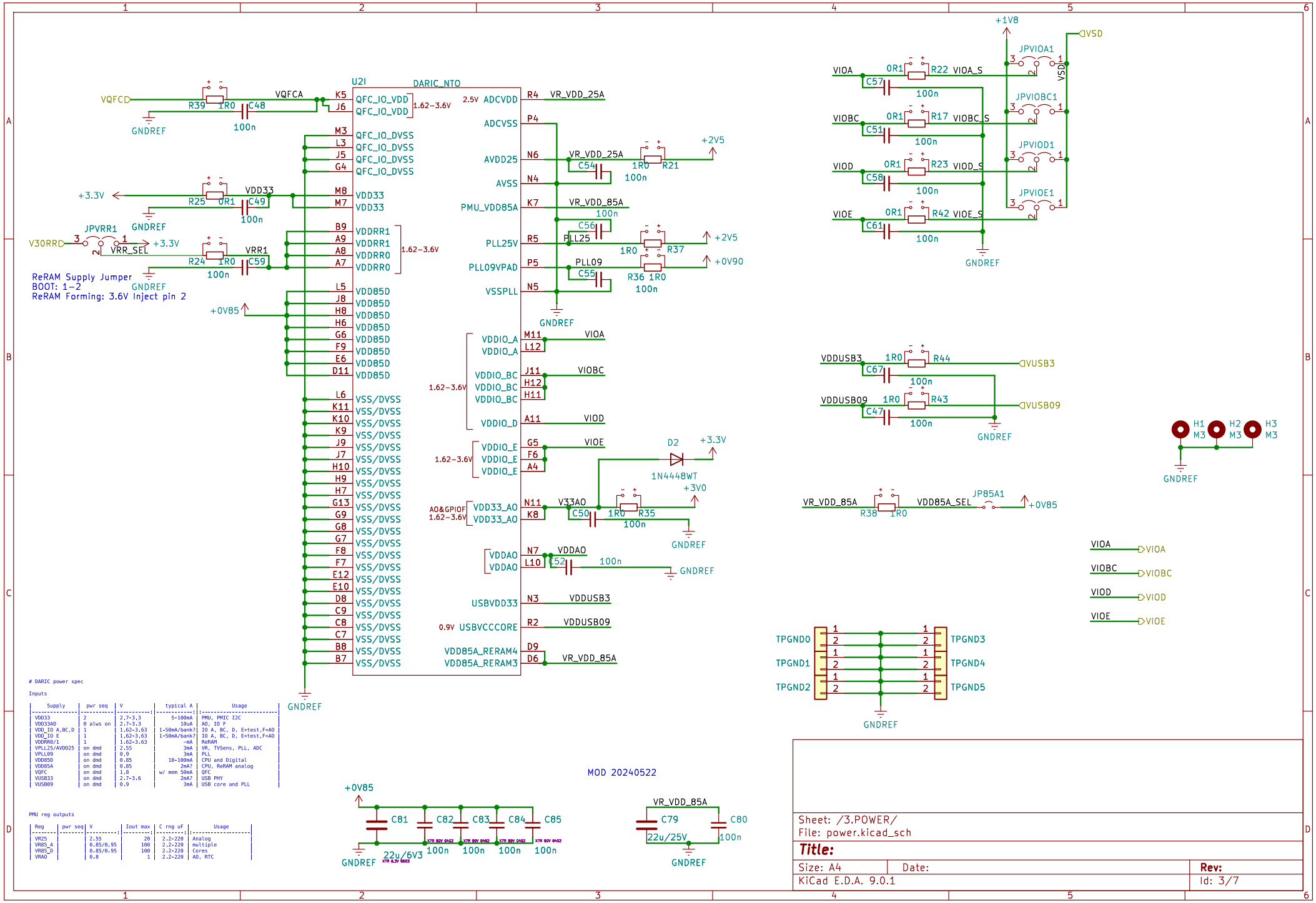

DARIC power spec

Inputs

Supply	pwr seq	V	typical A	Usage
VDD33	2	2.7-3.3	5-100mA	PMU, PMIC I2C
VDD33AO	0 alws on	2.7-3.3	10uA	AO, IO F
VDD_IO A,BC,D	1	1.62-3.63	1-50mA/bank?	IO A, BC, D, E+test,F+AO
VDD_IO E	1	1.62-3.63	1-50mA/bank?	IO A, BC, D, E+test,F+AO
VDDRR0/1	1	1.62-3.63	-mA	ReRAM
VPLL25/AVDD25	on dmd	2.55	3mA	VR, TVSens, PLL, ADC
VPLL09	on dmd	0.9	3mA	PLL
VDD85D	on dmd	0.85	10-100mA	CPU and Digital
VDD85A	on dmd	0.85	2mA?	CPU, ReRAM analog
VQFC	on dmd	1.8	w/ mem 50mA	QFC
VUSB33	on dmd	2.7-3.6	2mA?	USB PHY
VUSB09	on dmd	0.9	3mA	USB core and PLL

PMU reg outputs

Reg	pwr seq	V	Iout max	C rng uF	Usage
VR25		2.55	20	2.2-220	Analog
VR85_A		0.85/0.95	100	2.2-220	multiple
VR85_D		0.85/0.95	100	2.2-220	Cores
VRAO		0.8	1	2.2-220	AO, RTC

Copyright © 2026 CrossBar, Inc.

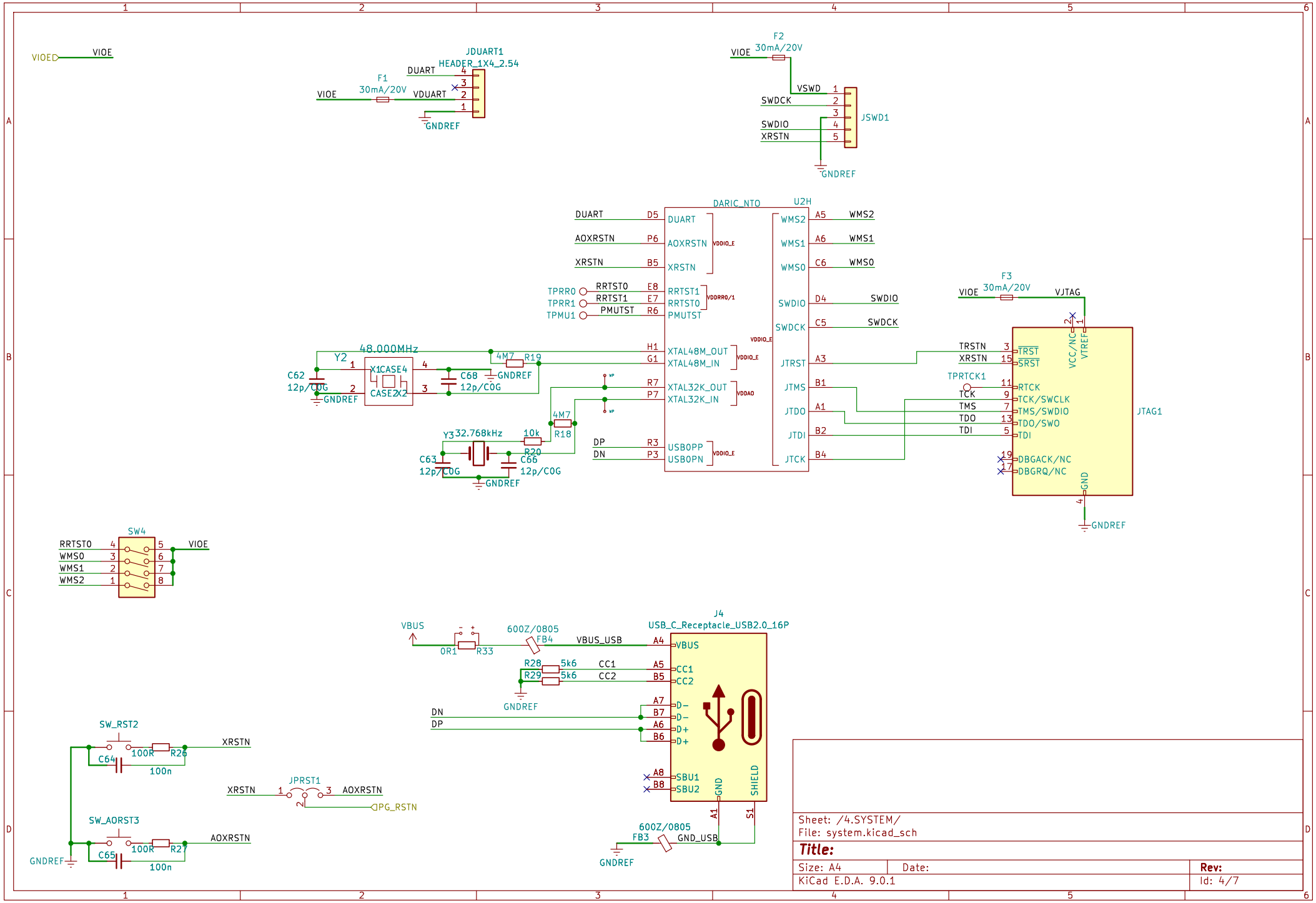

Sheet: /4.SYSTEM/
File: system.kicad_sch

Title:

Size: A4	Date:	Rev:
KiCad E.D.A. 9.0.1		Id: 4/7

Copyright © 2026 CrossBar, Inc.

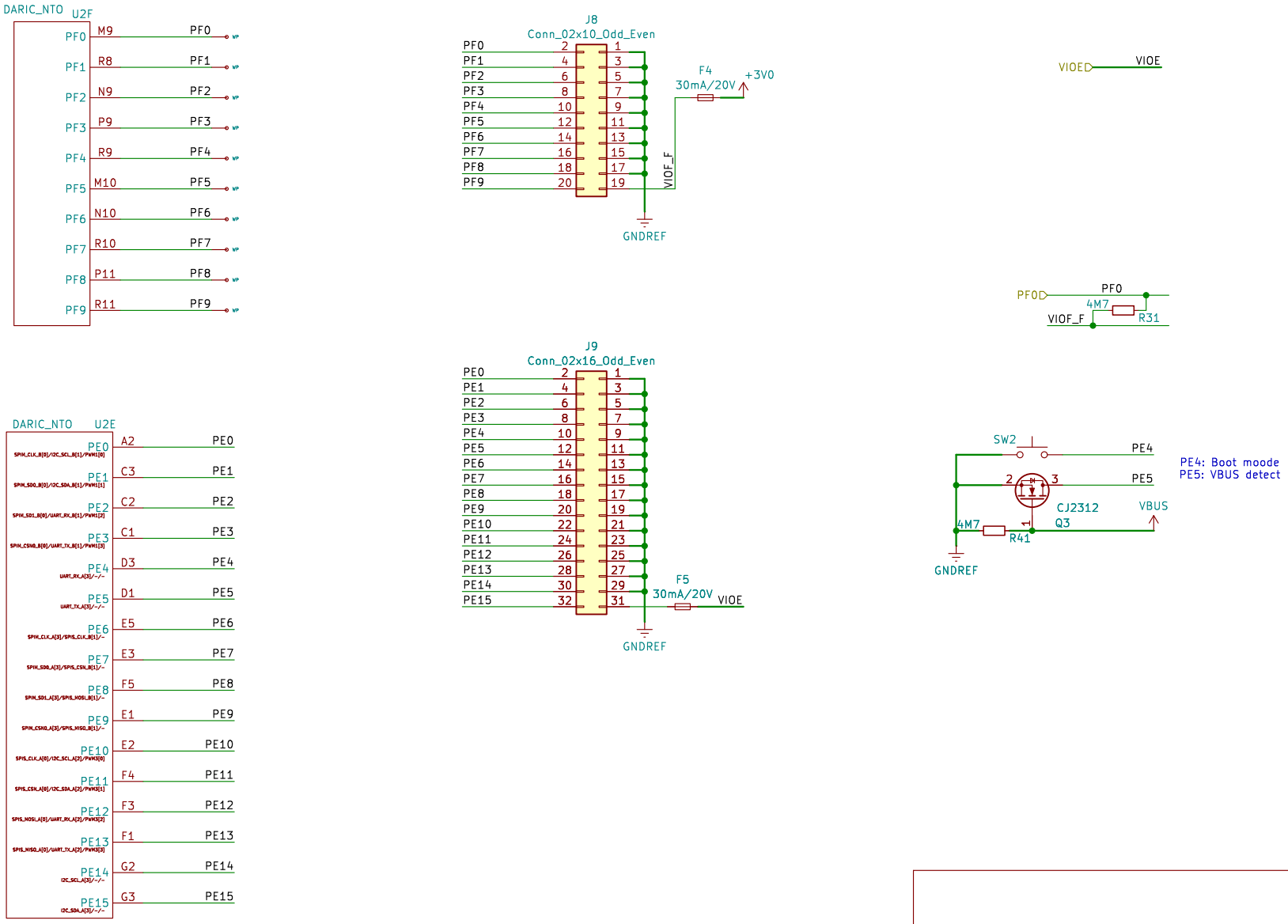

Sheet: /5.IO/
File: USB.kicad_sch

Title:

Size: A4	Date:	Rev:
KiCad E.D.A. 9.0.1		Id: 5/7

Copyright © 2026 CrossBar, Inc.

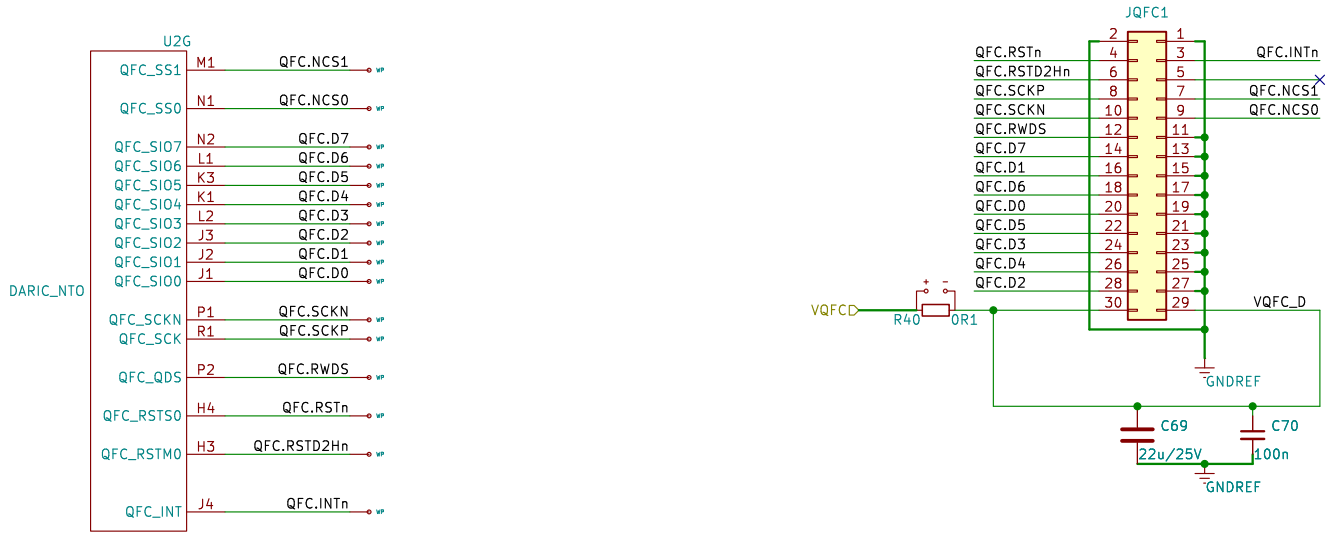

Sheet: /6.QFC/
File: qfc.kicad_sch

Title:

Size: A4	Date:	Rev:
KiCad E.D.A. 9.0.1		Id: 6/7

Copyright © 2026 CrossBar, Inc.

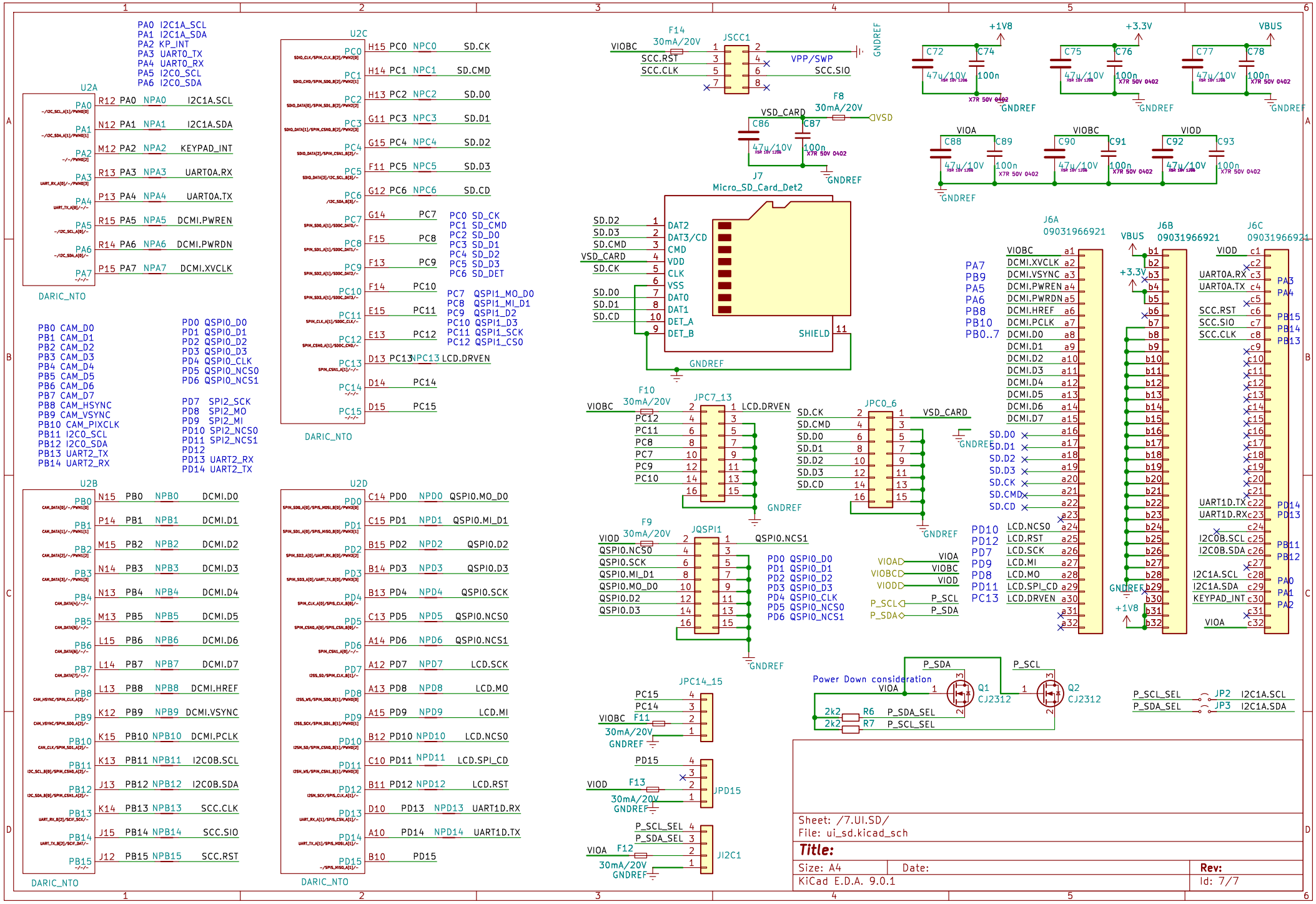

Copyright © 2026 CrossBar, Inc.