NTO_EVB Board User Manual

Version 1.0

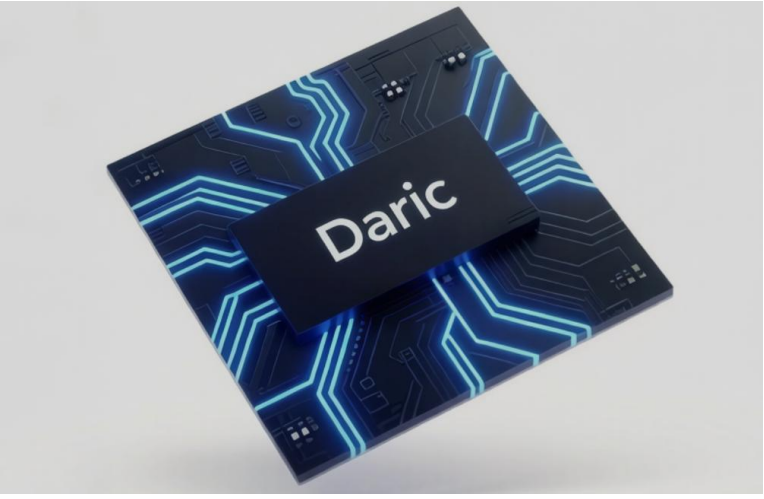

CROSSBAR PROPRIETARY AND CONFIDENTIAL INFORMATION
Crossbar Incorporated reserves the right to change products or specifications without notice. ©2018 Crossbar Incorporated. All rights reserved.

Table of Contents

1 Overview 3
2 Included Accessories 3
3 External Connectors 4
4 Mode Selection 4
5 Power Management 5
6 Detailed External Pin Descriptions 6
7 Development Environment & Debug Interfaces 9
7.1 SWD Interface 9
7.2 JTAG Interface (20-pin) 10
8 Revision History 11

CRAMIUM PROPRIETARY AND CONFIDENTIAL INFORMATION

1 Overview

This document describes the NTO_EVB evaluation board, external interfaces, power management, and debug interfaces. It also provides a GPIO multiplexing table and connection guidance.

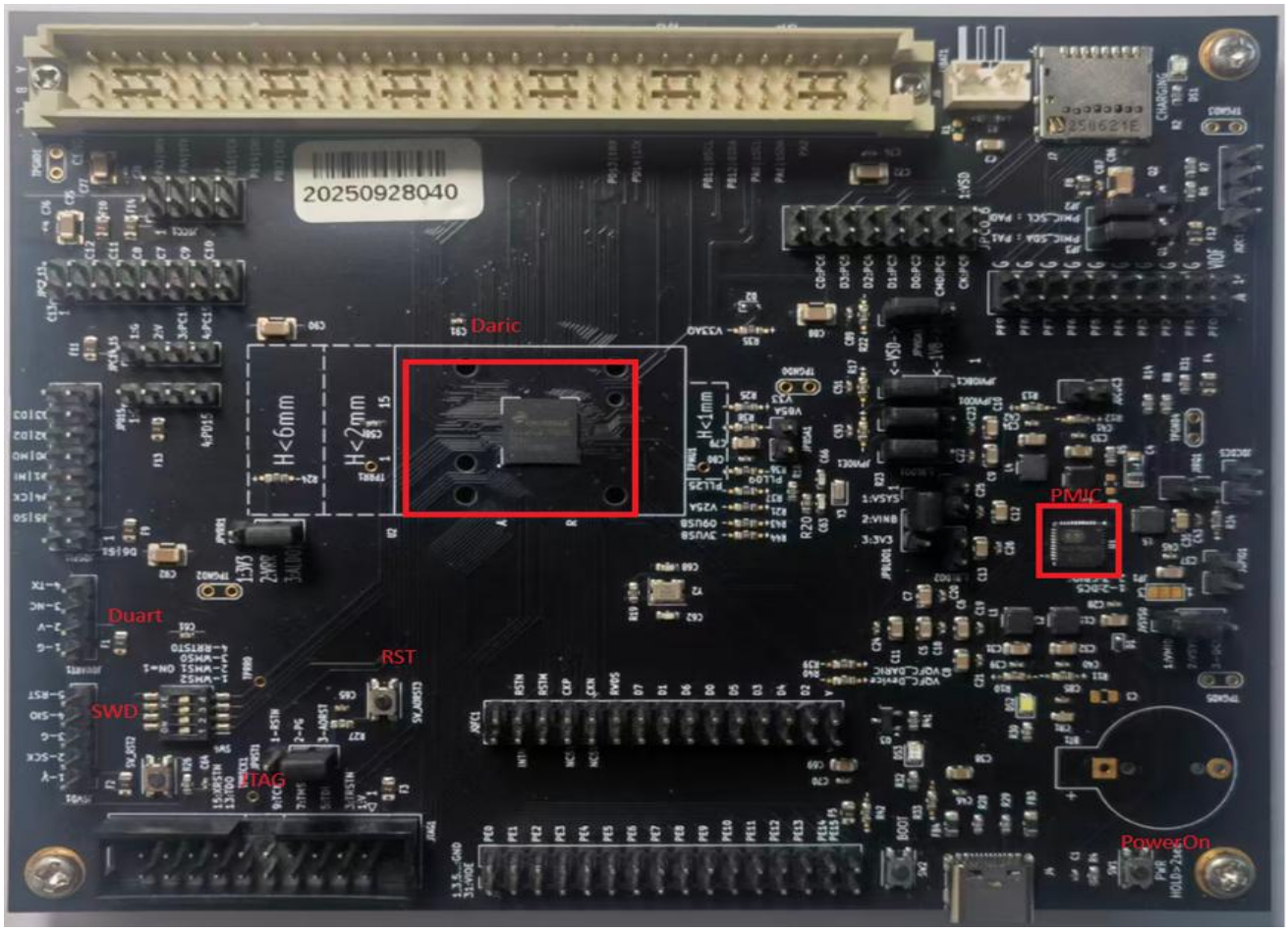

Figure 1. EVB Board

2 Included Accessories

Image	Name	Function
	SWD Cable	ARM SWD connection
	USB Cable	USB testing
	JTAG Cable	RISC_V JTAG connection

CRAMIUM PROPRIETARY AND CONFIDENTIAL INFORMATION

3 External Connectors

Connector	Description	
J8	PORTF (0–9)	
J9	PORTE (0–15)	
JQFC1	QFC Interface	
JPC0_6	SD Interface / PORTC (0–6)	
JPC7_13	PORTE (7–13)	
J6	A	DCMI / SD Host / LCD
	B	5V, 3.3V, 1.8V, GND
	C	UART1/UART2/I2C1/I2C2
JUART1	Debug TxD (1 Mbps)	
JSWD1	SWD interface for J-LINK (V9.0 or above)	
JTAG1	J-LINK JTAG downloader (RISC-V)	

4 Mode Selection

Pin	Description	Notes
RRTST0	Monitor/force operation bias and/or reference current for RRAM0	
WMS0	Mode selection P0	Default pull-down
WMS1	Mode selection P1	Default pull-down
WMS2	Mode selection P2	Default pull-down; Default low → Normal Mode; ON → Test Mode (internal use only)

CRAMIUM PROPRIETARY AND CONFIDENTIAL INFORMATION

5 Power Management

External Battery Connector:

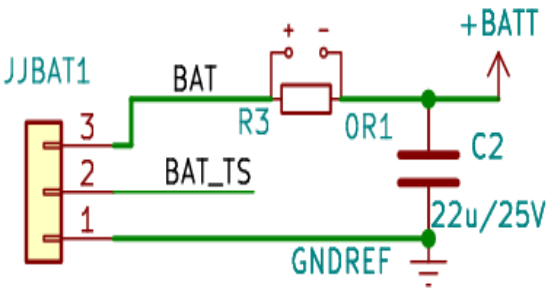

1 – GND (black), 2 – BAT_TS (yellow), 3 – VCC (red)

USB Power:

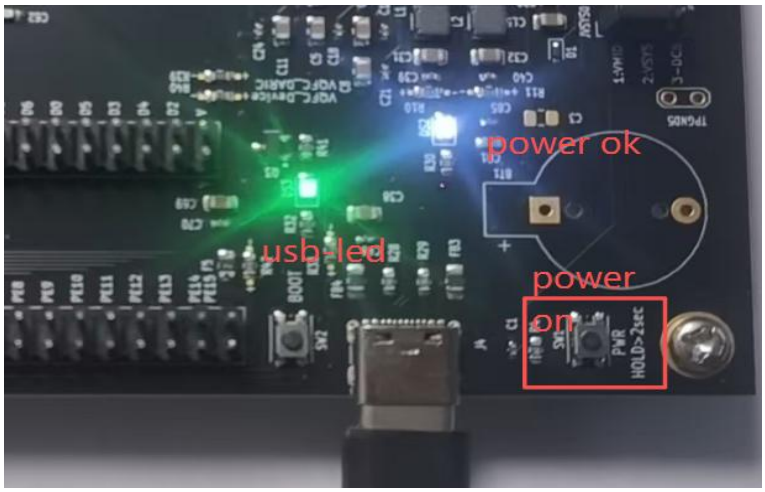

- When powered by USB, the PMIC outputs rails directly.
- Battery Power: Press SW1 for ~2 seconds then release to power on.
- The Power OK LED indicates successful power-on.

CRAMIUM PROPRIETARY AND CONFIDENTIAL INFORMATION

6 Detailed External Pin Descriptions

Figure 1. EVB Board Photo

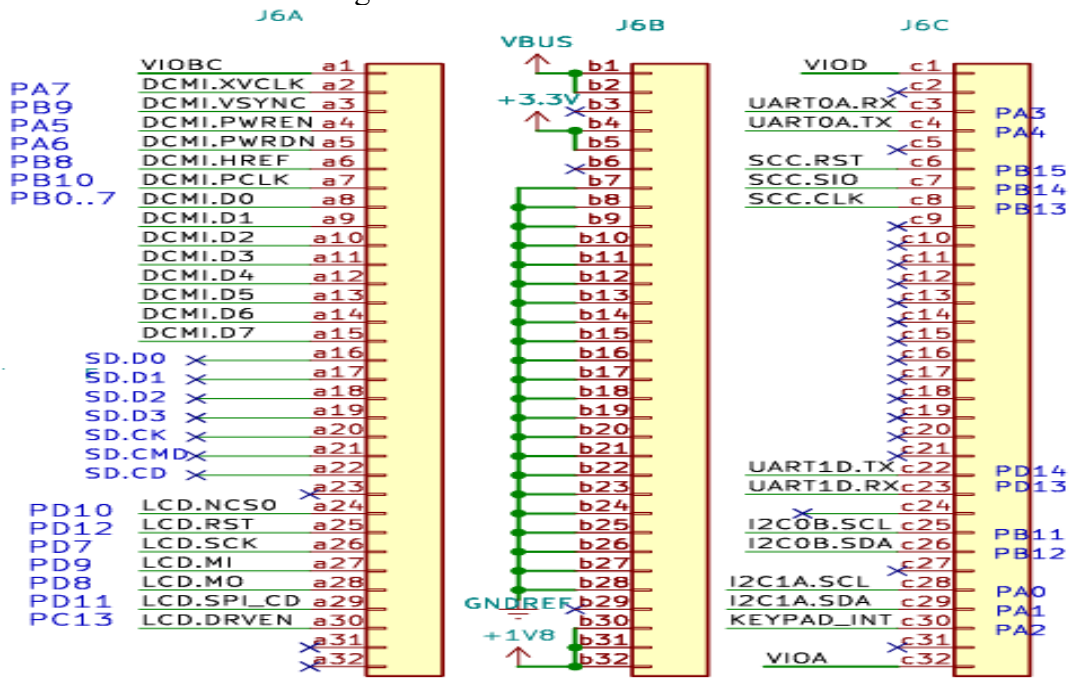

J6

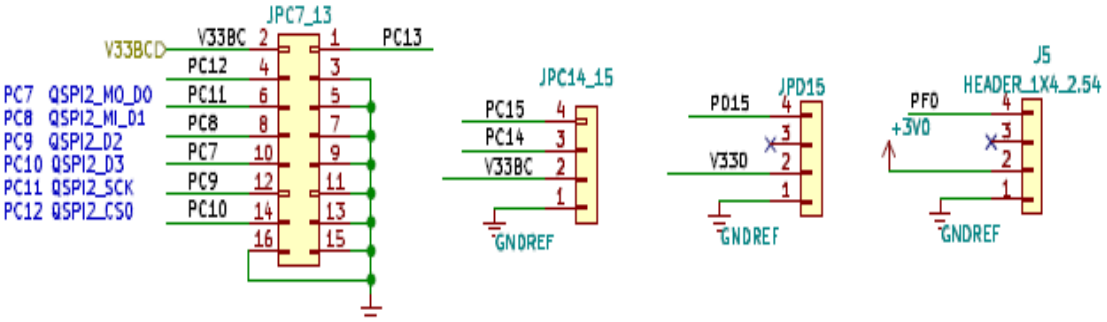

JPC7_13/JPC14-15/JPD15/J5

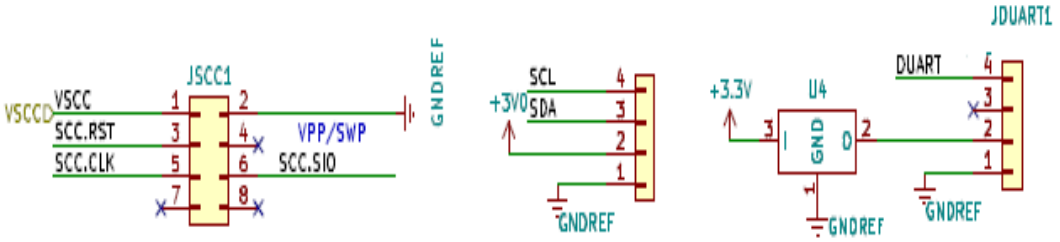

JSCC1/I2C/UART_P

CRAMIUM PROPRIETARY AND CONFIDENTIAL INFORMATION

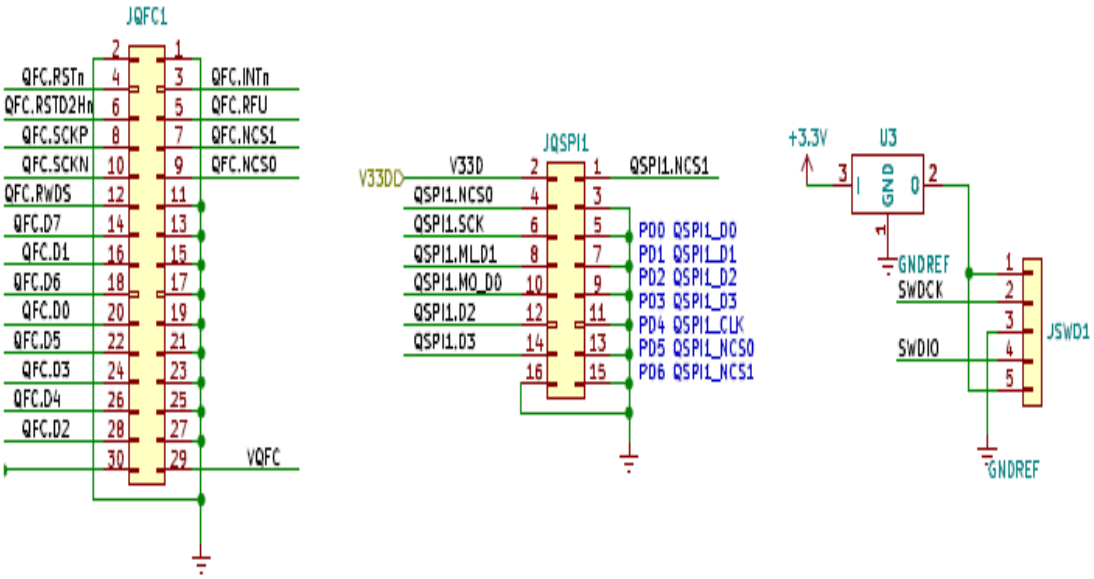

JQFC/JQSPI/SWD

This section lists the multiplexing for connector J6 (Columns A/B/C) and corresponding GPIO mapping.

Pin	GPIO (L)	Column A	Column B	Column C	GPIO (R)
1	/	VIOBC	+5V	VIOD	/
2	PA7	DCMI.XVCLK	+5V	NC	
3	PB9	DCMI.VSYNC	NC	UART1.TX	PA3
4	PA5	DCMI.PWREN	+3.3V	UART1.RX	PA4
5	PA6	DCMI.PWRDN	+3.3V	NC	
6	PB8	DCMI.HREF	NC	SCC.RST	PB15
7	PB10	DCMI.PCLK	GND	SCC.SIO	PB14
8	PB0	DCMI.D0	GND	SCC.CLK	PB13
9	PB1	DCMI.D1	GND	NC	
10	PB2	DCMI.D2	GND	NC	
11	PB3	DCMI.D3	GND	NC	
12	PB4	DCMI.D4	GND	NC	
13	PB5	DCMI.D5	GND	NC	
14	PB6	DCMI.D6	GND	NC	
15	PB7	DCMI.D7	GND	NC	
16	PC2	SD.D0	GND	NC	

CRAMIUM PROPRIETARY AND CONFIDENTIAL INFORMATION

17	PC3	SD.D1	GND	NC	
18	PC4	SD.D2	GND	NC	
19	PC5	SD.D3	GND	NC	
20	PC0	SD.CK	GND	NC	
21	PC1	SD.CMD	GND	NC	
22	PC6	SD.CD	GND	UART2.RX	PD14
23		NC	GND	UART2.TX	PD13
24	PD10	LCD.NCS0	GND	NC	
25	PD12	LCD.RST	GND	I2C1.SCL	PB11
26	PD7	LCD.SCK	GND	I2C1.SDA	PB12
27	PD9	LCD.MI	GND	NC	
28	PD8	LCD.MO	GND	I2C2.SCL	PA0
29	PD11	LCD.SPI_CD	NC	I2C2.SDA	PA1
30	PC13	CD.DRVEN	+1.8V	KEYPAD_INT	PA2
31		NC	+1.8V	NC	
32		NC	+1.8V	VIOA	

Note: For additional GPIO multiplexing relationships, refer to the device DataSheet.

CRAMIUM PROPRIETARY AND CONFIDENTIAL INFORMATION

7 Development Environment & Debug Interfaces

7.1 SWD Interface

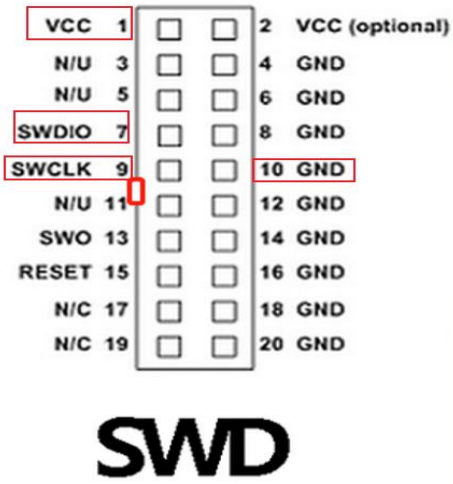

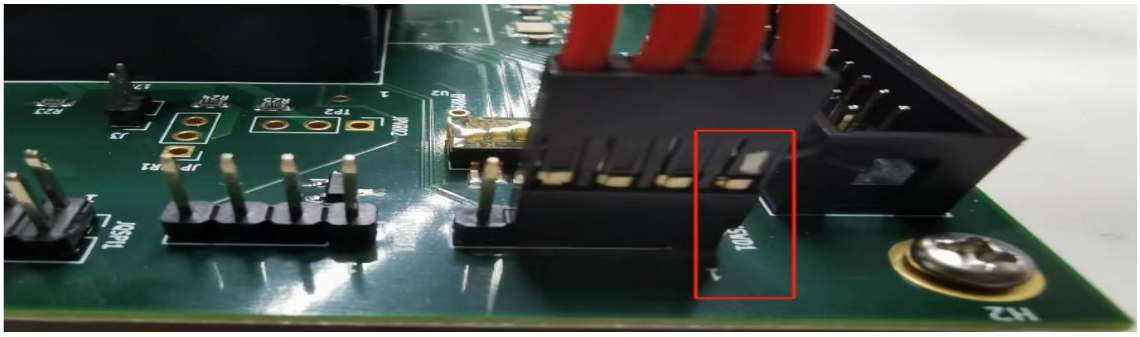

Signal	Description
SWD VCC	SWD reference voltage
SWCK	Clock
GND	Ground
SWIO	Data I/O

CRAMIUM PROPRIETARY AND CONFIDENTIAL INFORMATION

7.2 JTAG Interface (20-pin)

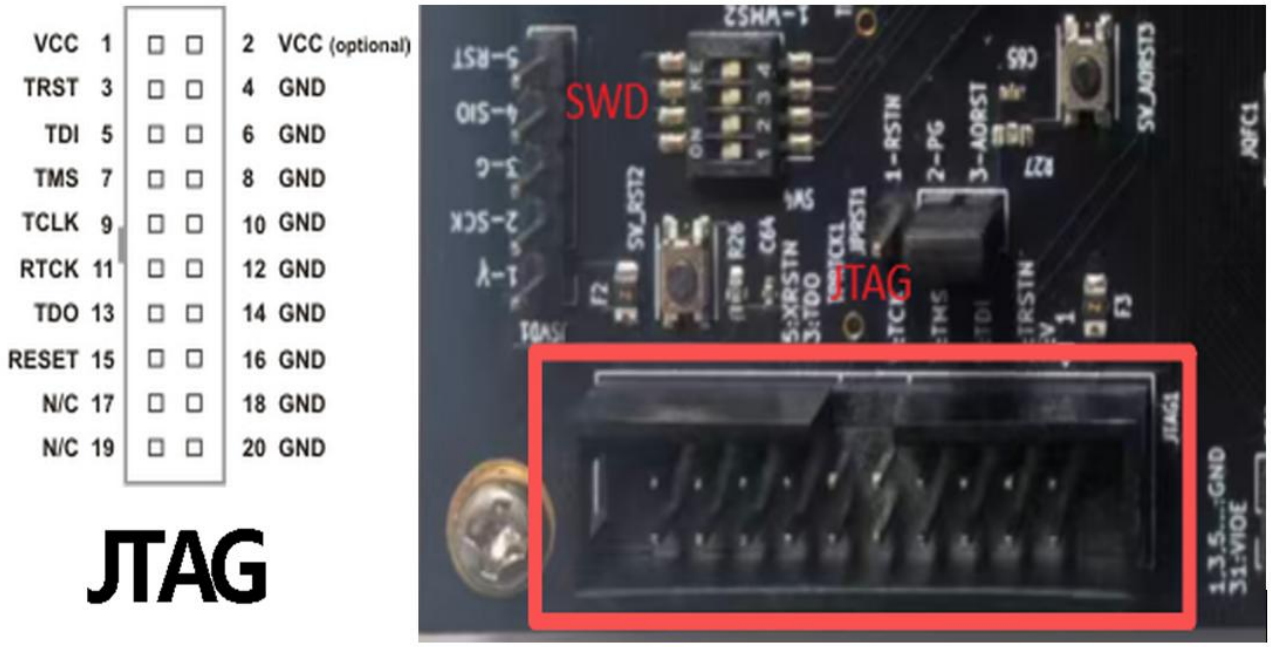

Pin	Target Signal	Notes
1	MCU VCC	VCC
2	MCU VCC	VCC
3	TRST	Test Reset
4	GND	—
5	TDI	Test Data In
6	GND	—
7	TMS / SWIO	JTAG TMS; SWD IO
8	GND	—
9	TCLK / SWCLK	JTAG Clock; SWD Clock
10	GND	—
11	RTCK	Return Clock
12	GND	—
13	TDO	Test Data Out
14	GND	—
15	RESET	Target Reset
16	GND	—
17	NC	—
18	GND	—
19	NC	—
20	GND	—

CRAMIUM PROPRIETARY AND CONFIDENTIAL INFORMATION

8 Revision History

Version	Date	Author	Notes
1.0	March 2026	HW Team	Initial release

©2023 Cramium Incorporated, All rights reserved. Daric™ is a trademark of Cramium Inc. All other brand or product names are trademarks of their respective holders. No license, express or implied, by estoppel or otherwise, is granted to any intellectual property rights that are disclosed by this document

Disclaimers

The information provided herein (the “Disclosure”) is provided solely for the evaluation and use of Cramium Inc. products. To the maximum extent permitted by applicable law: (1) The Disclosure is made available “AS IS” and with all faults, CROSSBAR INC. HEREBY DISCLAIMS ALL WARRANTIES AND CONDITIONS OF ANY KIND, EXPRESS, IMPLIED, OR STATUTORY, INCLUDING BUT NOT LIMITED TO WARRANTIES OF MERCHANTABILITY, NON-INFRINGEMENT, OR FITNESS FOR ANY PARTICULAR PURPOSE; and (2) CROSSBAR INC. SHALL NOT BE LIABLE FOR ANY CLAIM, DAMAGES OR OTHER LIABILITY, WHETHER IN AN ACTION OF CONTRACT, TORT OR OTHERWISE, ARISING FROM, OUT OF OR IN CONNECTION WITH THE DISCLOSURE FOR ANY LOSS OR DAMAGE OF ANY KIND OR NATURE RELATED TO, ARISING UNDER, OR IN CONNECTION WITH, THE DISCLOSURE (INCLUDING YOUR USE OF THE DISCLOSURE), INCLUDING FOR ANY DIRECT, INDIRECT, SPECIAL, INCIDENTAL, OR CONSEQUENTIAL LOSS OR DAMAGE (INCLUDING LOSS OF DATA, PROFITS, GOODWILL, OR ANY TYPE OF LOSS OR DAMAGE SUFFERED AS A RESULT OF ANY ACTION BROUGHT BY A THIRD PARTY) EVEN IF SUCH DAMAGE OR LOSS WAS REASONABLY FORESEEABLE OR CROSSBAR INC. HAD BEEN ADVISED OF THE POSSIBILITY OF THE SAME. Cramium Inc. products are not designed for or intended to be used for fail-safe performance, for medical use, for transportation, for energy production, for military use or for other critical applications. Cramium Inc. may change the Disclosure at any time and assumes no obligation to correct any errors contained in the Disclosure or to provide notification of updates to the Disclosure.