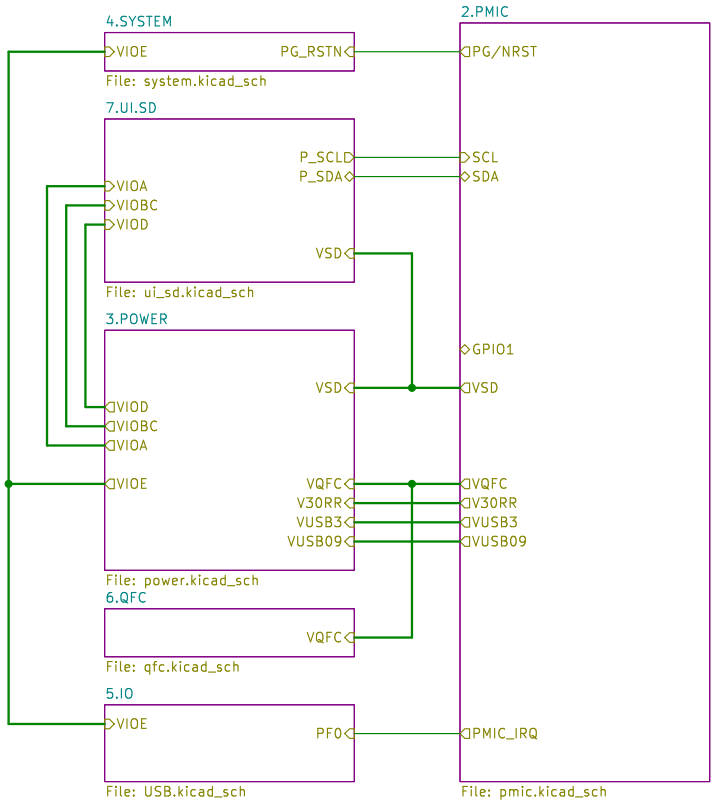


```
Battery and USB VBUS

USB VBUS -----> VMID <------ Batt
                  |           ^
                (SW5)         |
                  |        charger
                  V           |
                VSYS --------+
```

VSYS	DCDC1		3V4, VDD33 (PMU input, boot)
		DLDO1/DC1SW	SW 3V4, VSD
	DCDC2		0V8–0V95, VDD85D
		jumper	0V8–0V95, VDD85A, VDD85A_RRAM
	DCDC3		1V–3V6, experiment
	DCDC4		1V8
		DLDO2/DC4SW	SW 1V8, VQFC
		CPUSLDO	0V9, VDDUSB09
	DCDC5		3V6, ReRAM forming
VSYS	VRTC		3V0, AO
VSYS/DCDC1		BLDO1	unused
		BLDO2	unused
VSYS		ALDO1	3V0, VDDReRAM (boot)
		ALDO2	2V5, AVDD, ADC (boot)
		ALDO3	3V1, VUSB3
		ALDO4	0V9, PLL

Sheet: /
File: daric_evb.kicad_sch

Title:

Size: A4	Date:	**Rev:**
KiCad E.D.A. 9.0.1		Id: 1/7

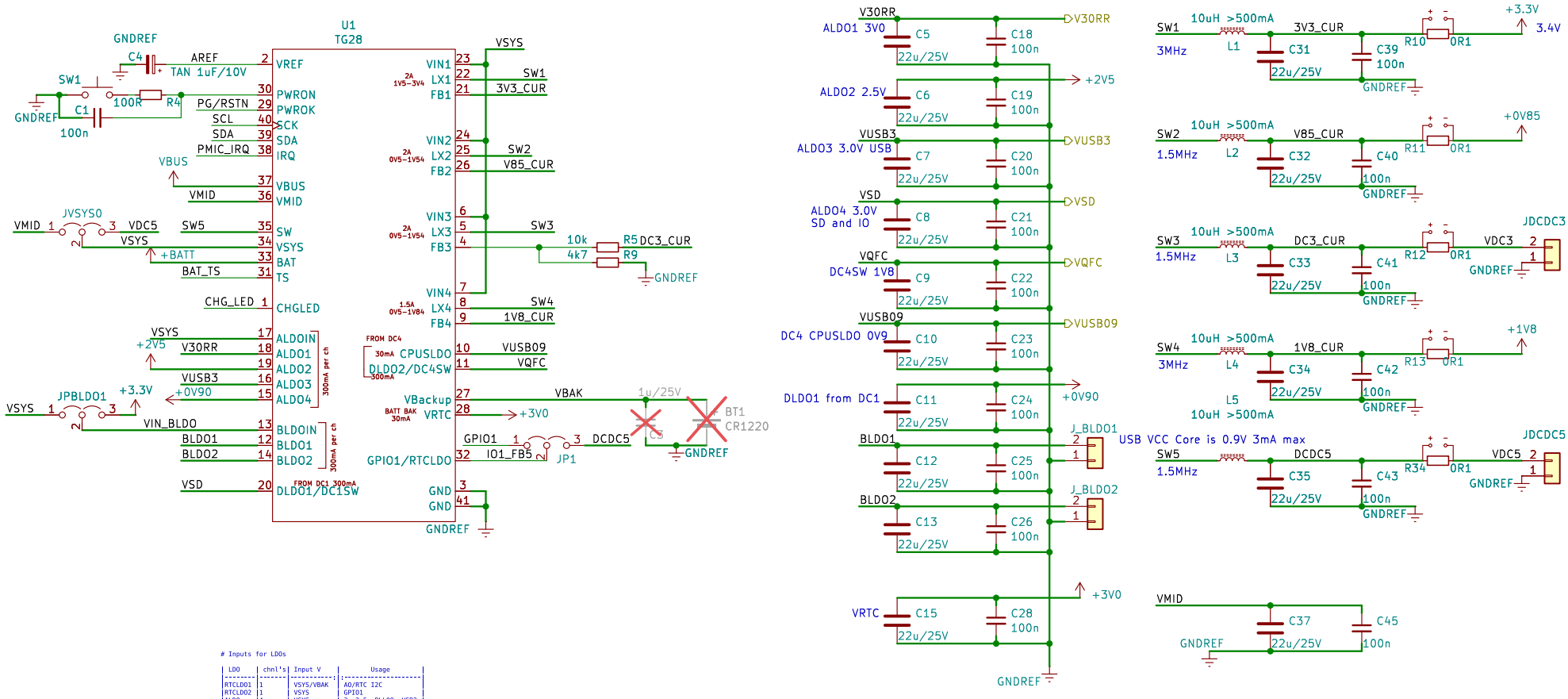

Inputs for LDOs

LDO	chnl's	Input V	Usage
RTCLDO1	1	VSYS/VBAK	AO/RTC I2C
RTCLDO2	1	VSYS	GPIO1
ALDO	4	VSYS	3, 2.5, PLL09, USB3
BLDO	2	selectable	unused
DLDO1	1	3V DCDC1	SW, SD
DLDO2	1	1.8V DCDC4	SW, QFC/Flash
CPUSLDO	1	1.8V DCDC4	VUSB09

Outputs of AXP2101/TG28

- DCDC5 buck, 3.6-3.7V, for ReRAM Forming
- VDDIO_E/VDD_TEST: select from ALDO1 or DCDC4
- VDDIO$_{AC,D}$: Select from ALDO1 or DCDC4
- Daric in sleep mode needs: VDD33(or VDDAO 0.8), and VDD33_AO
- Only AOXRST can wake up from PwrOFF mode.

Output	type	Default V	V range	VRegAddr	Seq	u	Cur	Usage
DCDC1	BUCK	3.3	1.5-3.4	82h	2	PMU	2000	boot 3V3 for PMU
DC1SW	Switch	OFF	= DCDC1	en: ??h	OFF	SD	400	SD, LCD?
DLDO1	LDO	NA	0.7-3.3	99h	NA	N/A	400	Use DC1SW
DCDC2	BUCK	0.85	0.5-1.54	83h	OFF	CPU	2000	boot Core 0V85(0V8-0V95)
DCDC3	BUCK	NA	0.5-1.54	84h	OFF	?	2000	unused for now
DCDC4	BUCK	1.8	0.5-1.84	85h	1	1.8V	1500	1.8V IO, DLDO2
DC4SW	Switch	OFF	= DCDC4	??h	OFF	N/A	200	QFC
DLDO2	LDO	NA	0.5-1.4	??h	NA	N/A	200	N/A, use DC4SW
CPUSLDO	LDO	0.9	0.7-1.4	98h	OFF	N/A	200	VUSB 0.9
DCDC5	BUCK	3.6	1.4-3.77	86h	OFF	RR	15007	ReRAM Forming
VRTC(28)	LDO	3.0	1.8/2.5/3/3.3		AON	RTC	30	VDD33_AO, VDD33 sleep
ALDO1	LDO	3.0	3.0(0.7-3.3)	92h	1	IO/RR	300	IO / ReRAM 3V
ALDO2	LDO	2.5	2.5(0.7-3.3)	93h	2	ANA	300	PLL, analog 2.5V
ALDO3	LDO		3.0(0.7-3.3)	94h	OFF	USB	200	VUSB 3V
ALDO4	LDO		3.0(0.7-3.3)	95h	OFF	PLL	200	PLL 0V9
BLDO1	LDO		3.0(0.7-3.3)	96h	OFF	N/A	200	(unused)
BLDO2	LDO		3.0(0.7-3.3)	97h	OFF	N/A	200	(unused)

List of Peripherals/Supplies

1. Daric: Core 0.9, PLL 0.9, ReRAM 1.6-3.0, IO 1.6-3.3, PMU 3.3
2. HyperBus/Flash, mostly 1.8
3. SD mostly 3.3
4. LCD, touchpad, 3V
5. USB 3.3 + 0.9
6. Camera 3.3 + 1.8?
7. Bluetooth/BLE 3.3
8. NFC 3.3

Sheet: /2.PMIC/
File: pmic.kicad_sch

Title:

Size: A4	Date:	Rev:
KiCad E.D.A. 9.0.1		Id: 2/7

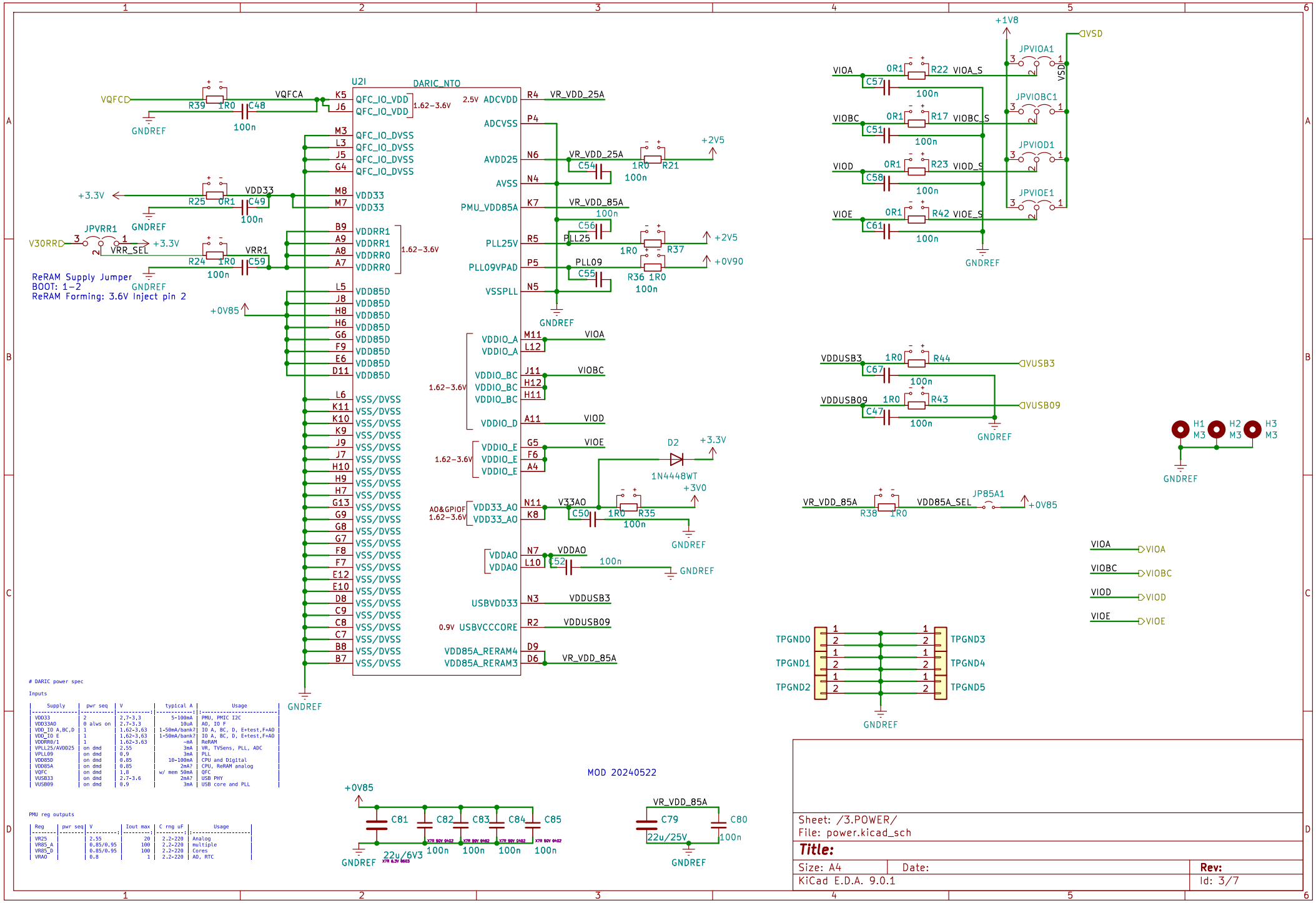
U2I
DARIC_NTO
VQFC
VQFCA
R39 1R0 C48
100n
GNDREF
QFC_IO_VDD
QFC_IO_VDD
1.62–3.6V
QFC_IO_DVSS
VDD33
VDDRR1
VDDRR0
VDD85D
VSS/DVSS
2.5V ADCVDD
ADCVSS
AVDD25
AVSS
PMU_VDD85A
PLL25V
PLL09VPAD
VSSPLL
VDDIO_A
VDDIO_BC
VDDIO_D
VDDIO_E
AO&GPIOF
VDD33_AO
VDDAO
USBVDD33
0.9V USBVCCCORE
VDD85A_RERAM4
VDD85A_RERAM3
VR_VDD_25A
VR_VDD_85A
VIOA
VIOBC
VIOD
VIOE
VDDUSB3
VDDUSB09
V33AO
+3.3V
+2V5
+0V90
+0V85
+1V8
VSD
+3V0
D2
1N4448WT
R21 1R0 C54 100n
R37 1R0 C56 100n
R36 1R0 C55 100n
R35 1R0 C50 100n
C52 100n
R25 0R1 C49 100n
R24 1R0 C59 100n
VDD33
VRR1
VRR_SEL
JPVRR1
V30RRD
ReRAM Supply Jumper
BOOT: 1–2
ReRAM Forming: 3.6V Inject pin 2
JPVIOA1
JPVIOBC1
JPVIOD1
JPVIOE1
R22 VIOA_S
R17 VIOBC_S
R23 VIOD_S
R42 VIOE_S
C57 100n
C51 100n
C58 100n
C61 100n
0R1
R44 1R0 C67 100n
R43 1R0 C47 100n
VUSB3
VUSB09
H1 M3
H2 M3
H3 M3
R38 1R0
JP85A1
VDD85A_SEL
TPGND0
TPGND1
TPGND2
TPGND3
TPGND4
TPGND5
C81 22u/6V3
C82 100n
C83 100n
C84 100n
C85 100n
C79 22u/25V
C80 100n
MOD 20240522
DARIC power spec
Inputs
Supply	pwr seq	V	typical A	Usage
VDD33	2	2.7-3.3	5-100mA	PMU, PMIC I2C
VDD33AO	0 alws on	2.7-3.3	10uA	AO, IO F
VDD_IO A,BC,D	1	1.62-3.63	1-50mA/bank?	IO A, BC, D, E+test,F+AO
VDD_IO E	1	1.62-3.63	1-50mA/bank?	IO A, BC, D, E+test,F+AO
VDDRR0/1	1	1.62-3.63	-mA	ReRAM
VPLL25/AVDD25	on dmd	2.55	3mA	VR, TVSens, PLL, ADC
VPLL09	on dmd	0.9	3mA	PLL
VDD85D	on dmd	0.85	10-100mA	CPU and Digital
VDD85A	on dmd	0.85	2mA?	CPU, ReRAM analog
VQFC	on dmd	1.8	w/ mem 50mA	QFC
VUSB33	on dmd	2.7-3.6	2mA?	USB PHY
VUSB09	on dmd	0.9	3mA	USB core and PLL
PMU reg outputs
Reg	pwr seq	V	Iout max	C rng uF	Usage
VR25		2.55	20	2.2-220	Analog
VR85_A		0.85/0.95	100	2.2-220	multiple
VR85_D		0.85/0.95	100	2.2-220	Cores
VRAO		0.8	1	2.2-220	AO, RTC
Sheet: /3.POWER/
File: power.kicad_sch
Title:
Size: A4
Date:
Rev:
KiCad E.D.A. 9.0.1
Id: 3/7

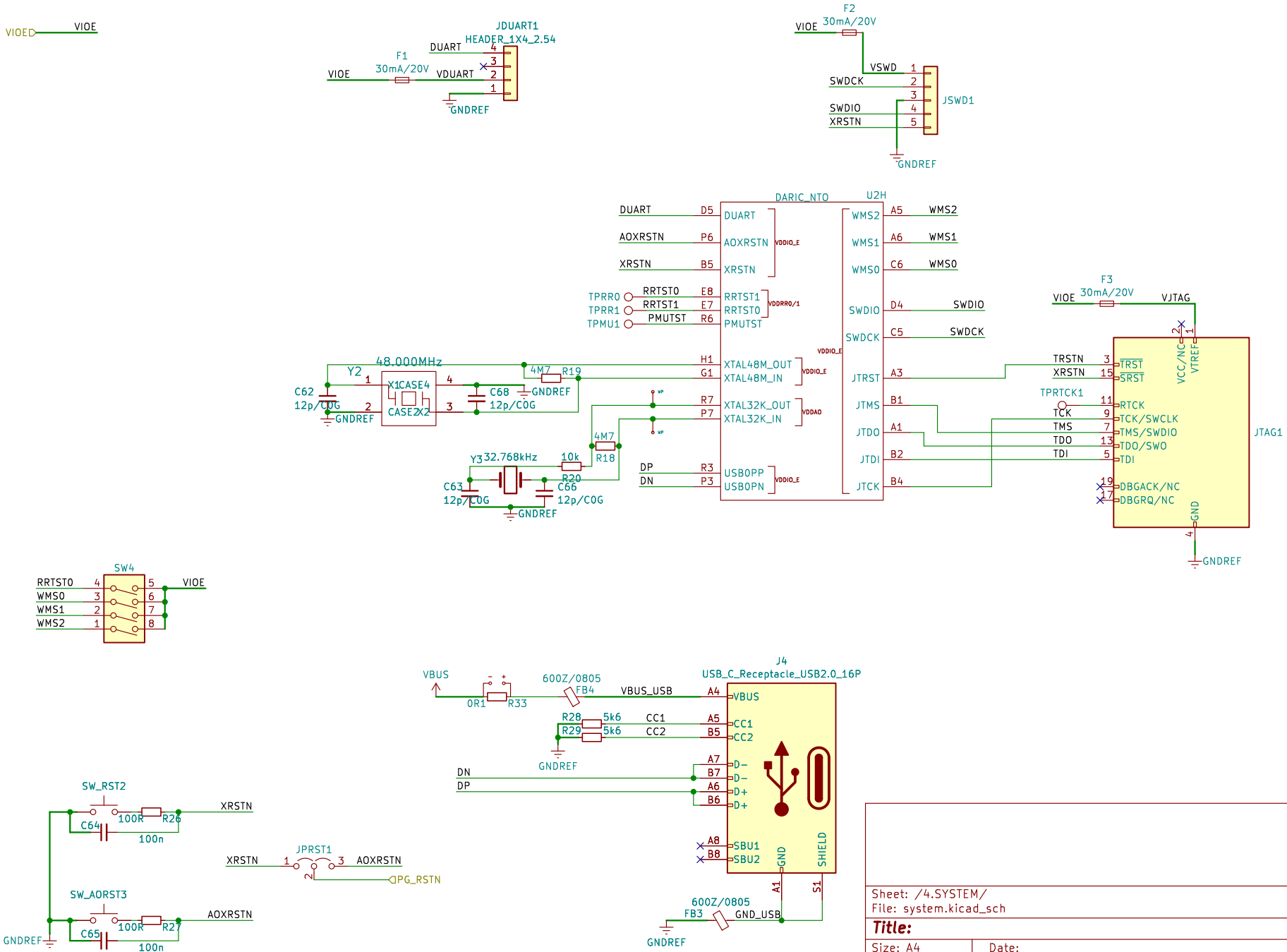

Sheet: /4.SYSTEM/
File: system.kicad_sch

Title:

Size: A4	Date:	Rev:
KiCad E.D.A. 9.0.1		Id: 4/7

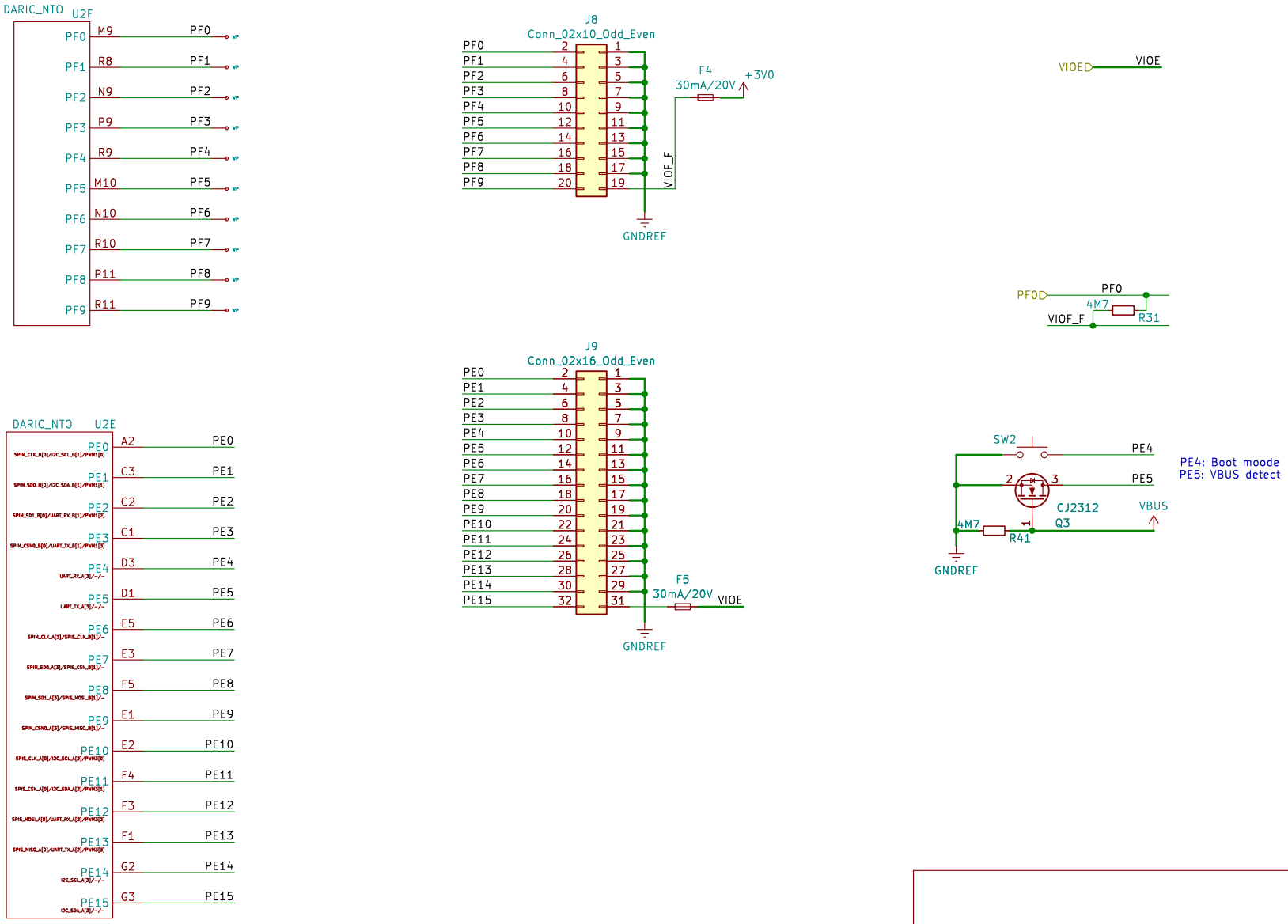

Sheet: /5.IO/
File: USB.kicad_sch

Title:

Size: A4	Date:	Rev:
KiCad E.D.A. 9.0.1		Id: 5/7

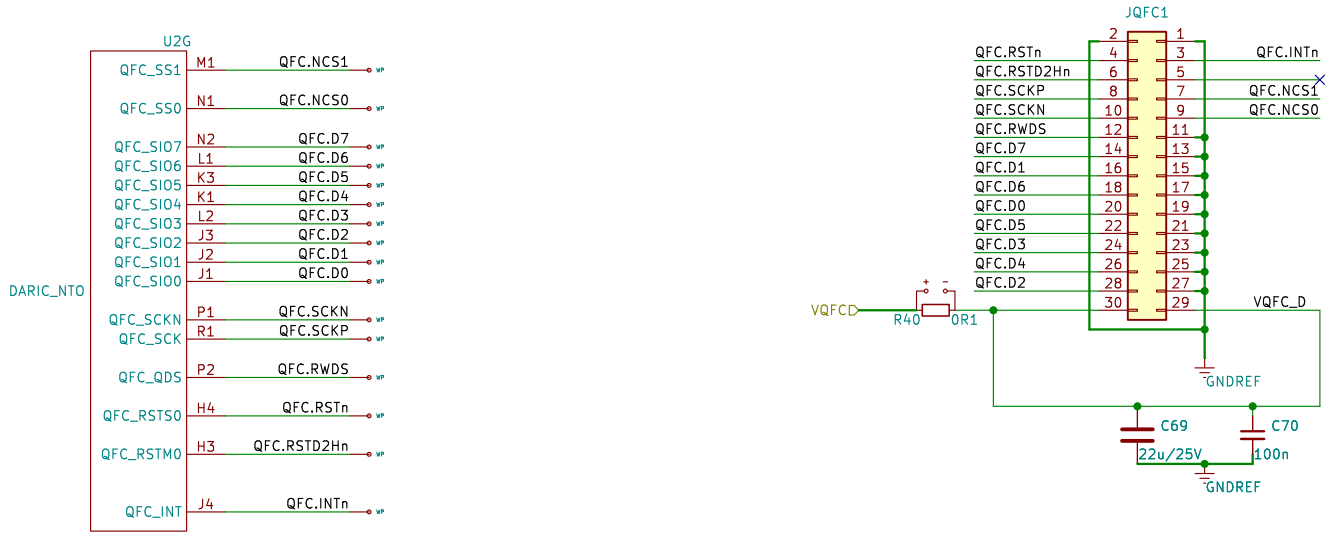

Sheet: /6.QFC/
File: qfc.kicad_sch

Title:

Size: A4	Date:	**Rev:**
KiCad E.D.A. 9.0.1		Id: 6/7

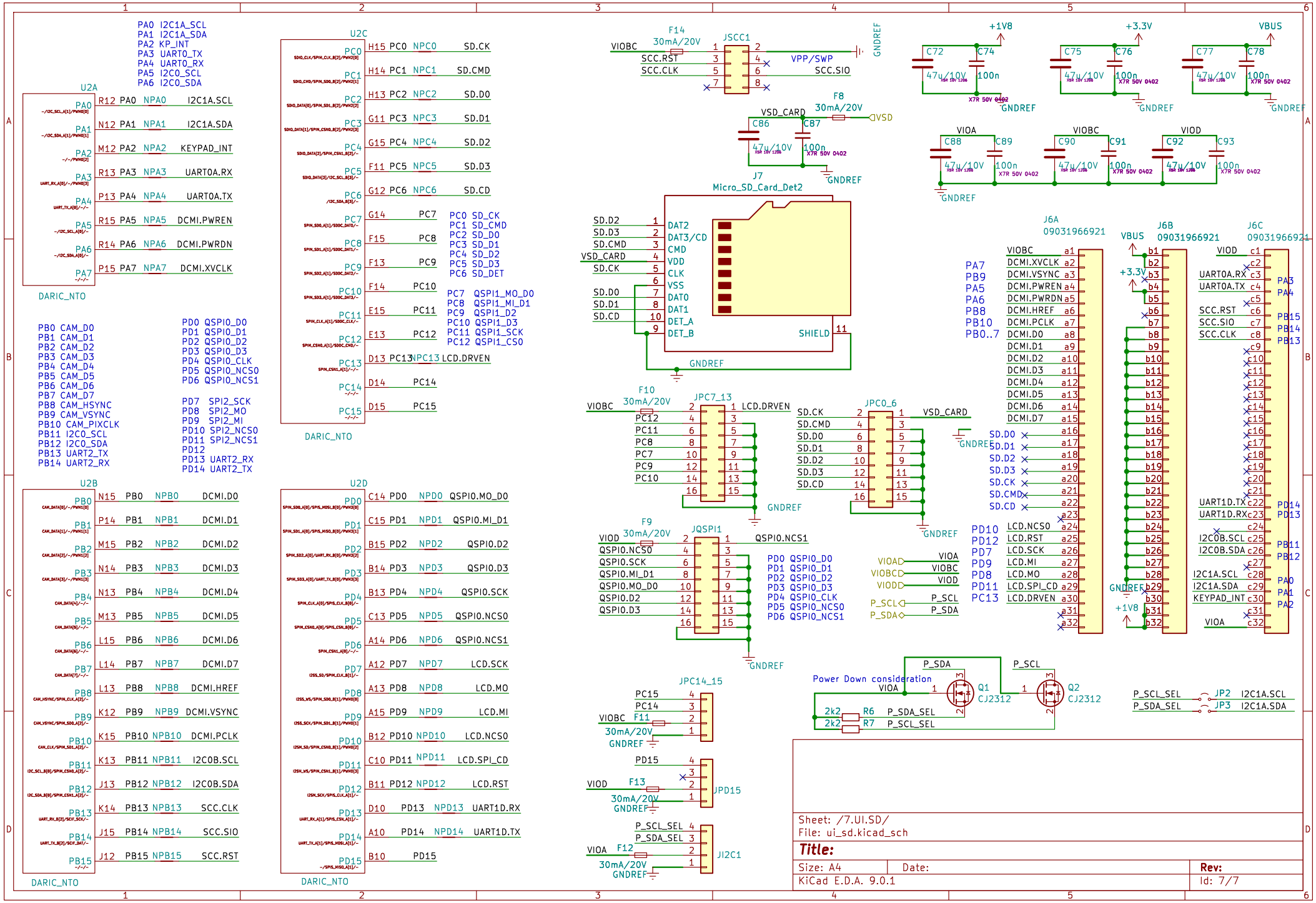
PA0 I2C1A_SCL
PA1 I2C1A_SDA
PA2 KP_INT
PA3 UART0_TX
PA4 UART0_RX
PA5 I2C0_SCL
PA6 I2C0_SDA
U2A
DARIC_NTO
PB0 CAM_D0
PB1 CAM_D1
PB2 CAM_D2
PB3 CAM_D3
PB4 CAM_D4
PB5 CAM_D5
PB6 CAM_D6
PB7 CAM_D7
PB8 CAM_HSYNC
PB9 CAM_VSYNC
PB10 CAM_PIXCLK
PB11 I2C0_SCL
PB12 I2C0_SDA
PB13 UART2_TX
PB14 UART2_RX
PD0 QSPI0_D0
PD1 QSPI0_D1
PD2 QSPI0_D2
PD3 QSPI0_D3
PD4 QSPI0_CLK
PD5 QSPI0_NCS0
PD6 QSPI0_NCS1
PD7 SPI2_SCK
PD8 SPI2_MO
PD9 SPI2_MI
PD10 SPI2_NCS0
PD11 SPI2_NCS1
PD12
PD13 UART2_RX
PD14 UART2_TX
U2B
U2C
PC0 SD_CK
PC1 SD_CMD
PC2 SD_D0
PC3 SD_D1
PC4 SD_D2
PC5 SD_D3
PC6 SD_DET
PC7 QSPI1_MO_D0
PC8 QSPI1_MI_D1
PC9 QSPI1_D2
PC10 QSPI1_D3
PC11 QSPI1_SCK
PC12 QSPI1_CS0
U2D
F14 30mA/20V
JSCC1
VIOBC
SCC.RST
SCC.CLK
VPP/SWP
SCC.SIO
GNDREF
+1V8
+3.3V
VBUS
C72 C74 C75 C76 C77 C78
47u/10V 100n
X7R 50V 0402
F8 30mA/20V
VSD_CARD
VSD
C86 C87
VIOA C88 C89
VIOBC C90 C91
VIOD C92 C93
J7
Micro_SD_Card_Det2
DAT2
DAT3/CD
CMD
VDD
CLK
VSS
DAT0
DAT1
DET_A
DET_B
SHIELD
SD.D2
SD.D3
SD.CMD
VSD_CARD
SD.CK
SD.D0
SD.D1
SD.CD
F10 30mA/20V
JPC7_13
LCD.DRVEN
JPC0_6
F9 30mA/20V
JQSPI1
QSPI0.NCS1
QSPI0.SCK
QSPI0.MI_D1
QSPI0.MO_D0
QSPI0.D2
QSPI0.D3
PD0 QSPI0_D0
PD1 QSPI0_D1
PD2 QSPI0_D2
PD3 QSPI0_D3
PD4 QSPI0_CLK
PD5 QSPI0_NCS0
PD6 QSPI0_NCS1
VIOAD VIOA
VIOBCD VIOBC
VIODD VIOD
P_SCL P_SCL
P_SDA P_SDA
J6A 09031966921
J6B 09031966921
J6C 09031966921
PA7
PB9
PA5
PA6
PB8
PB10
PB0..7
PD10
PD12
PD7
PD9
PD8
PD11
PC13
LCD.NCS0
LCD.RST
LCD.SCK
LCD.MI
LCD.MO
LCD.SPI_CD
LCD.DRVEN
UART0A.RX
UART0A.TX
SCC.RST
SCC.SIO
SCC.CLK
UART1D.TX
UART1D.RX
I2C0B.SCL
I2C0B.SDA
I2C1A.SCL
I2C1A.SDA
KEYPAD_INT
JPC14_15
F11 30mA/20V
JPD15
F13 30mA/20V
JI2C1
F12 30mA/20V
P_SCL_SEL
P_SDA_SEL
Power Down consideration
Q1 CJ2312
Q2 CJ2312
R6 2k2
R7 2k2
JP2 I2C1A.SCL
JP3 I2C1A.SDA
Sheet: /7.UI.SD/
File: ui_sd.kicad_sch
Title:
Size: A4
Date:
Rev:
KiCad E.D.A. 9.0.1
Id: 7/7