PMIC TG28

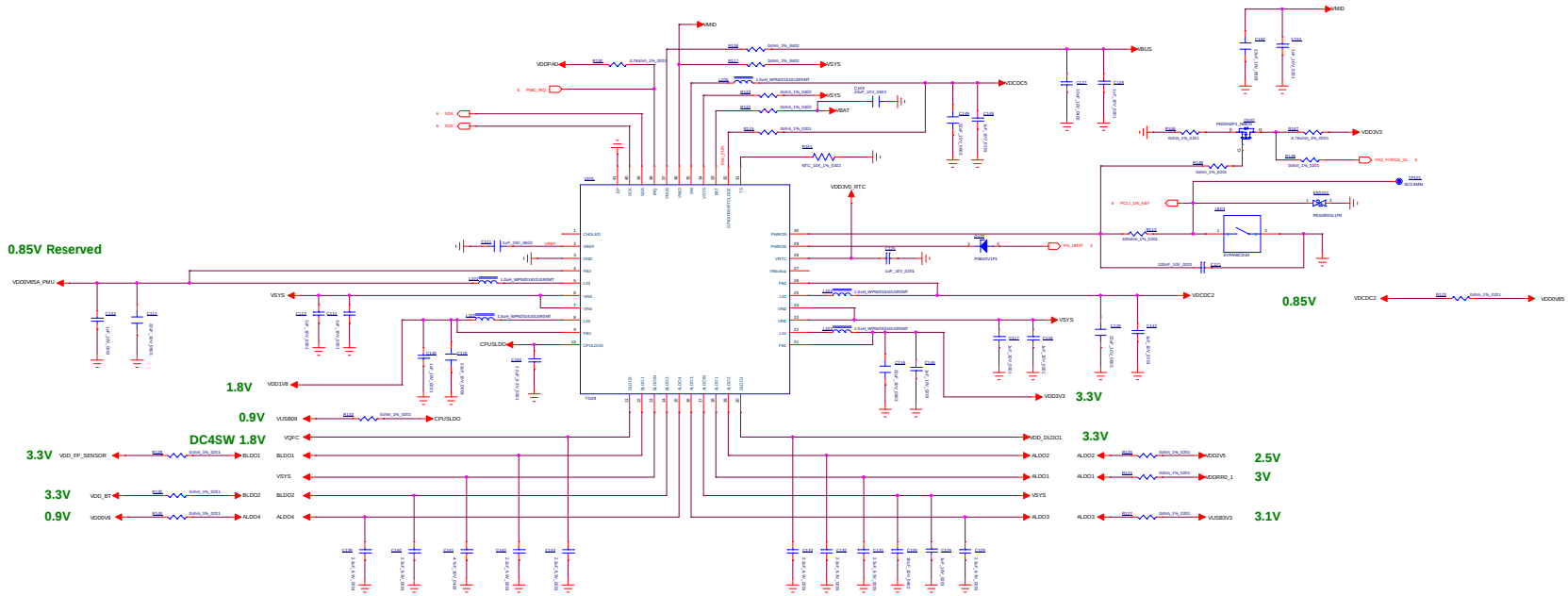

Size	Document Number	Rev
B	<Doc>	

Date: Wednesday, October 22, 2025 Sheet 1 of 10

PDF 檔案使用 "pdfFactory Pro" 試用版本建立 www.pdffactory.com

Copyright © 2026 CrossBar, Inc.

NTO Daric Power

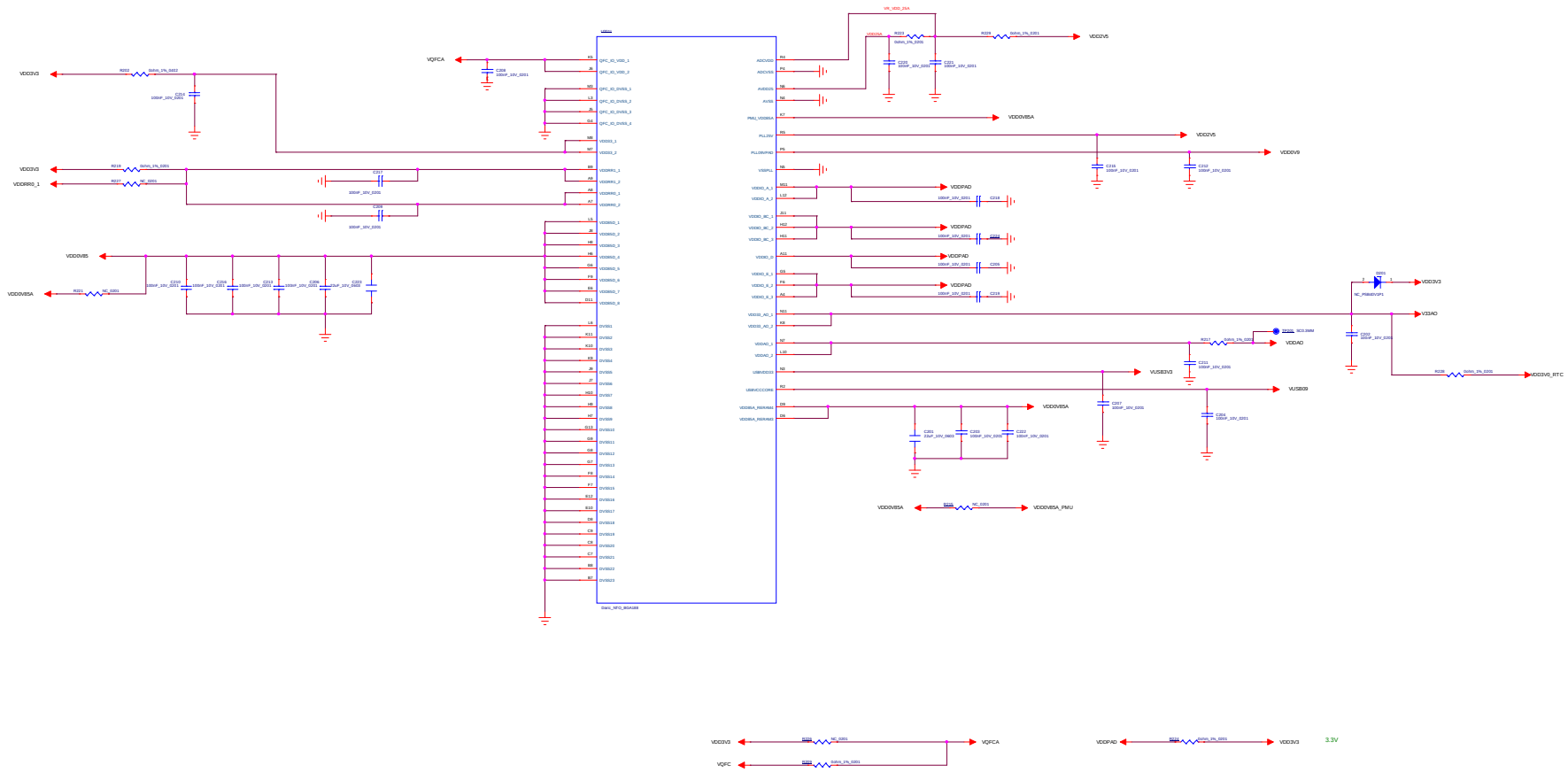

Size	03. DARIC_POWER		
Custom	Document Number <Doc>		Rev V2.0
Date: Wednesday, October 27, 2021		Sheet 7 of 11	

PDF 檔案使用 "pdfFactory Pro" 試用版本建立 www.pdffactory.com

Copyright © 2026 CrossBar, Inc.

NTO Daric System

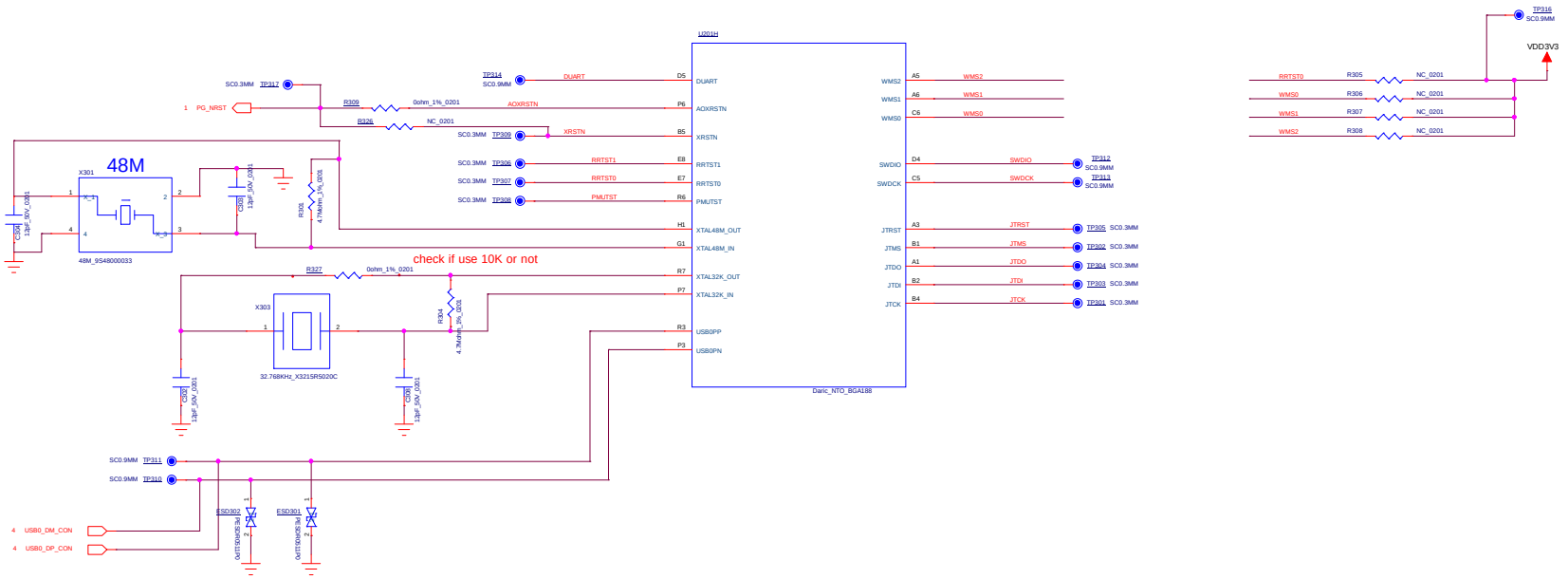

Title	03. DARIC_SYSTEM		
Size C	Document Number <Doc>		Rev V2.0
Date: Wednesday, October 22, 2025		Sheet 3 of 10	

PDF 檔案使用 "pdfFactory Pro" 試用版本建立 www.pdffactory.com

Copyright © 2026 CrossBar, Inc.

USB

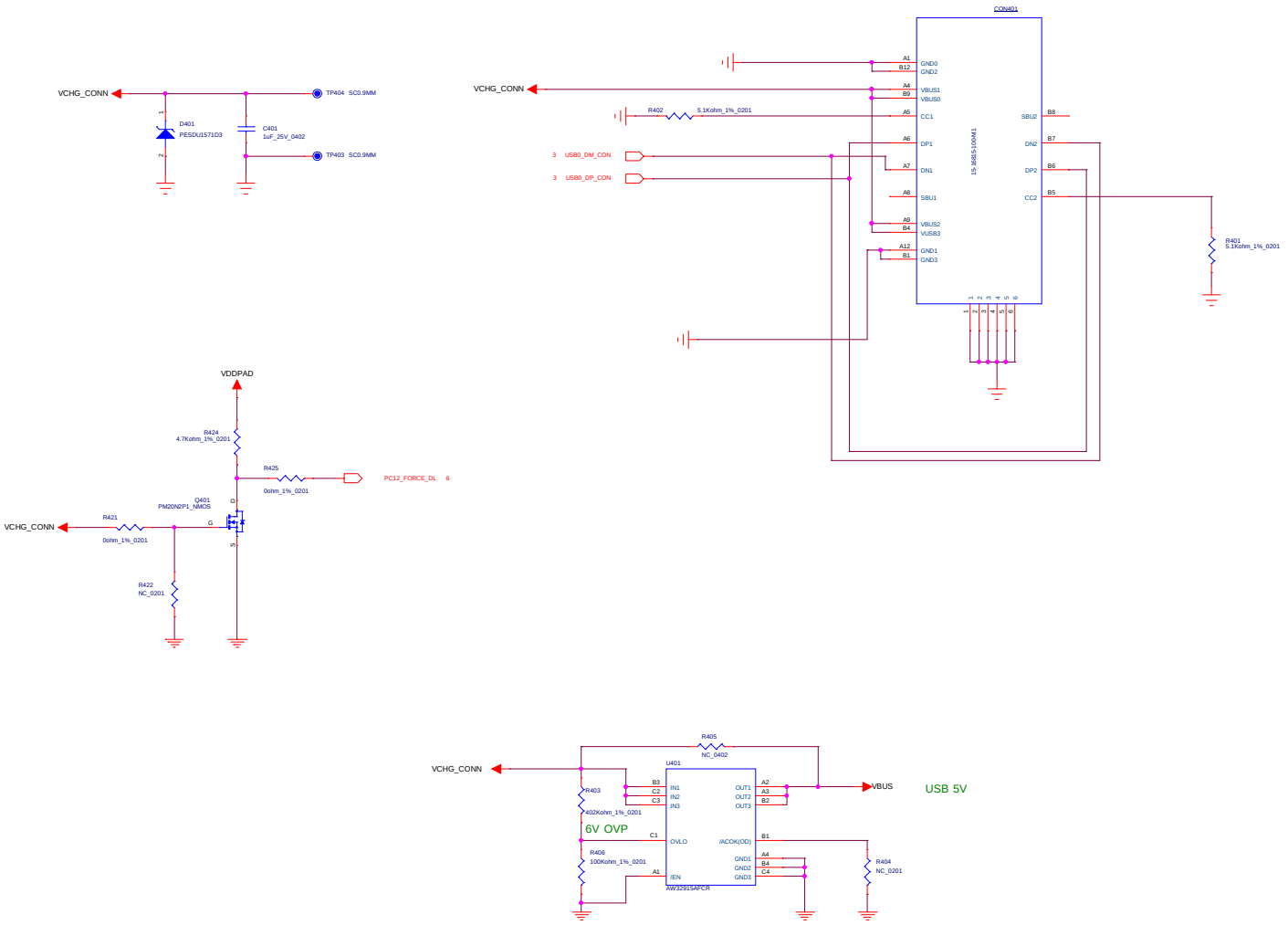

Title	04. DARIC_USB	
Size C	Document Number <Doc>	Rev V2.0
Date: Wednesday, October 22, 2025	Sheet 4 of 10	

PDF 檔案使用 "pdfFactory Pro" 試用版本建立 www.pdffactory.com

Copyright © 2026 CrossBar, Inc.

NTO DARIC QFC

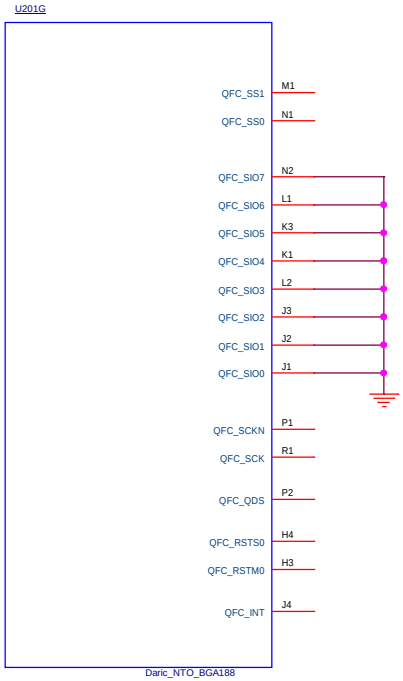

Title	05. DARIC_QFC	
Size B	Document Number <Doc>	Rev V2.0
Date: Wednesday, October 22, 2025	Sheet 5 of 10	

PDF 檔案使用 "pdfFactory Pro" 試用版本建立 www.pdffactory.com

Copyright © 2026 CrossBar, Inc.

NTO DARIC_Peripheral

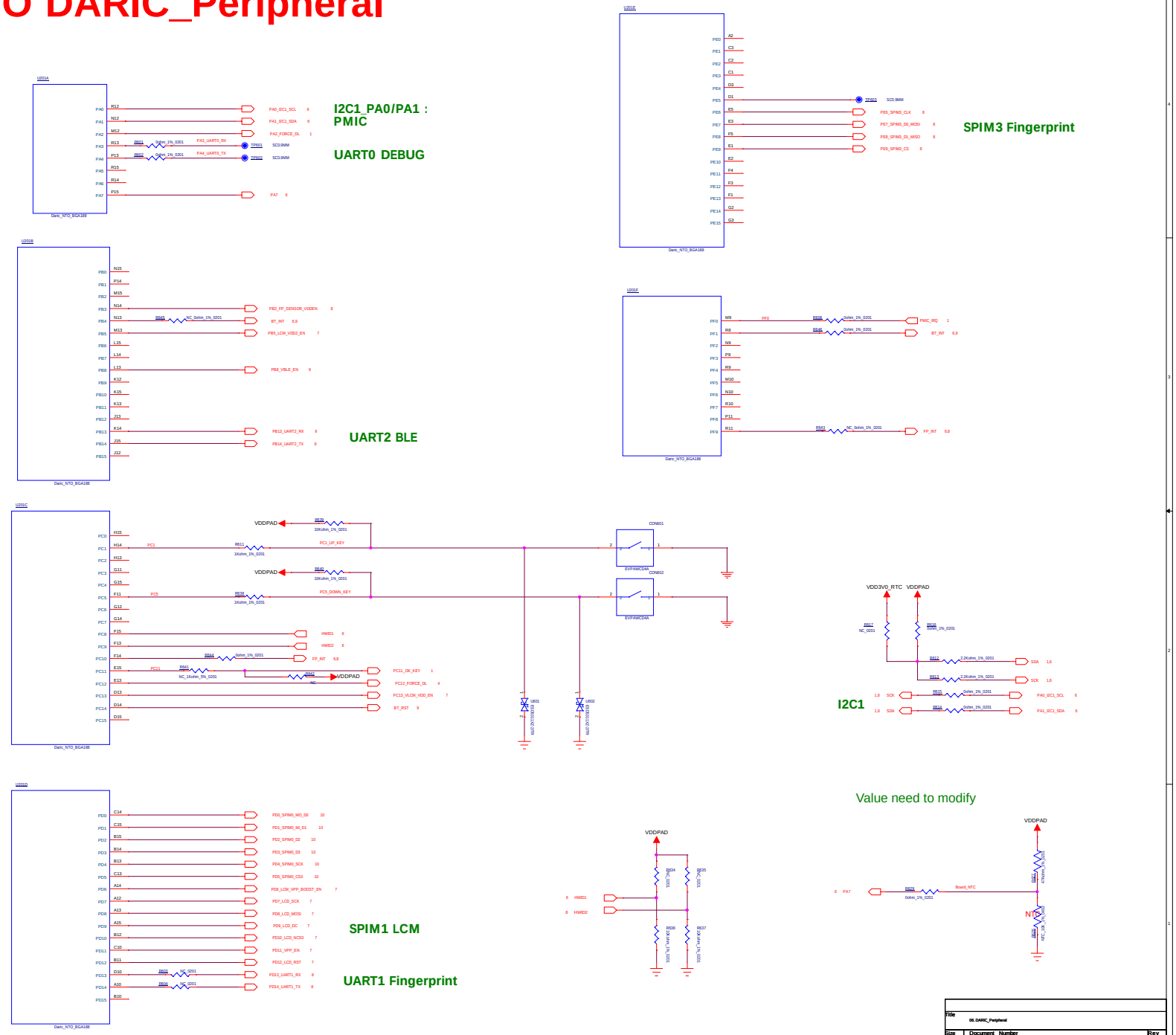

PDF 檔案使用 "pdfFactory Pro" 試用版本建立 www.pdffactory.com

Copyright © 2026 CrossBar, Inc.

OLED LCM(3.3V IO)

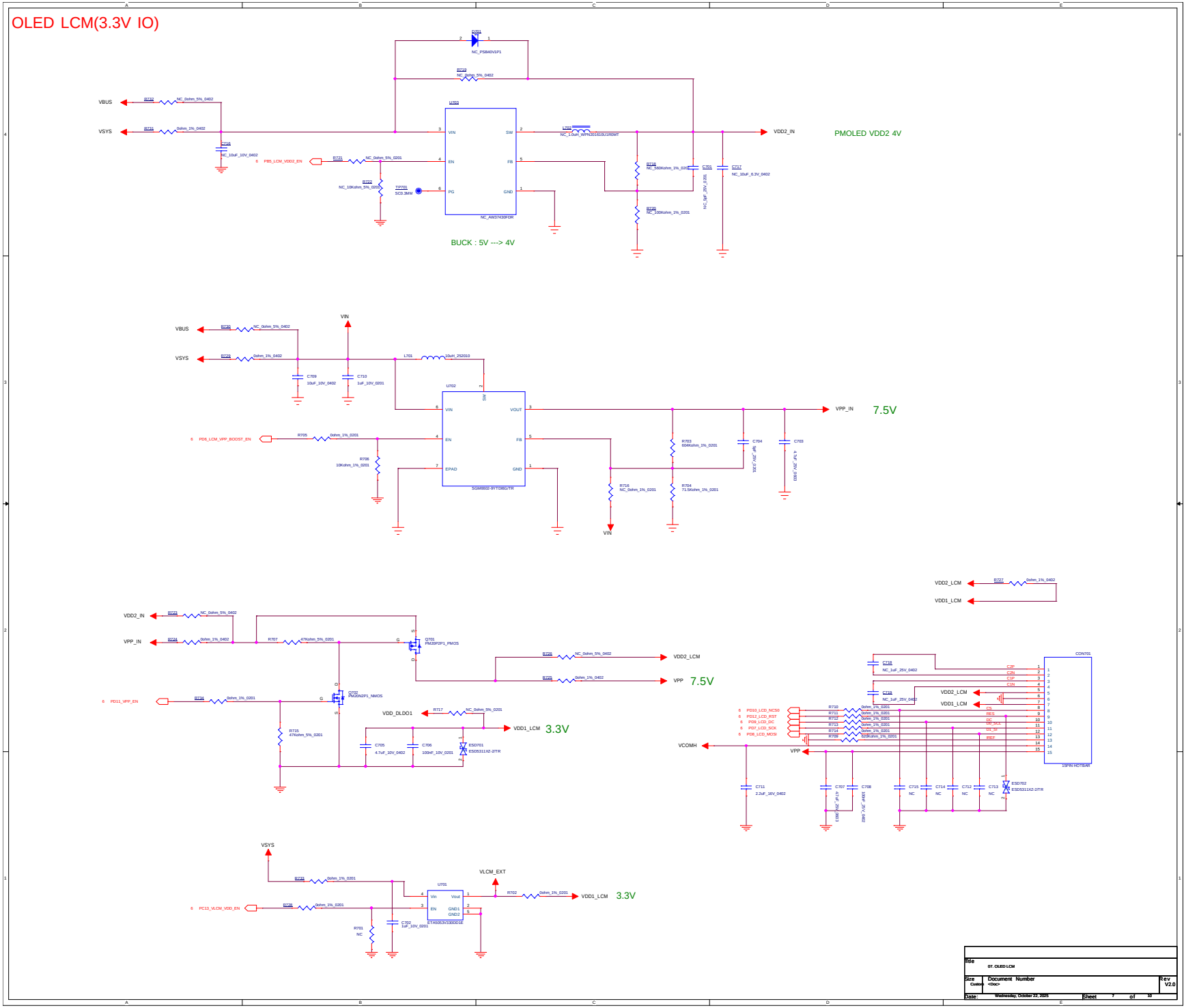

PDF 檔案使用 "pdfFactory Pro" 試用版本建立 www.pdffactory.com

Copyright © 2026 CrossBar, Inc.

Fingerprint sensor (3.3V IO)

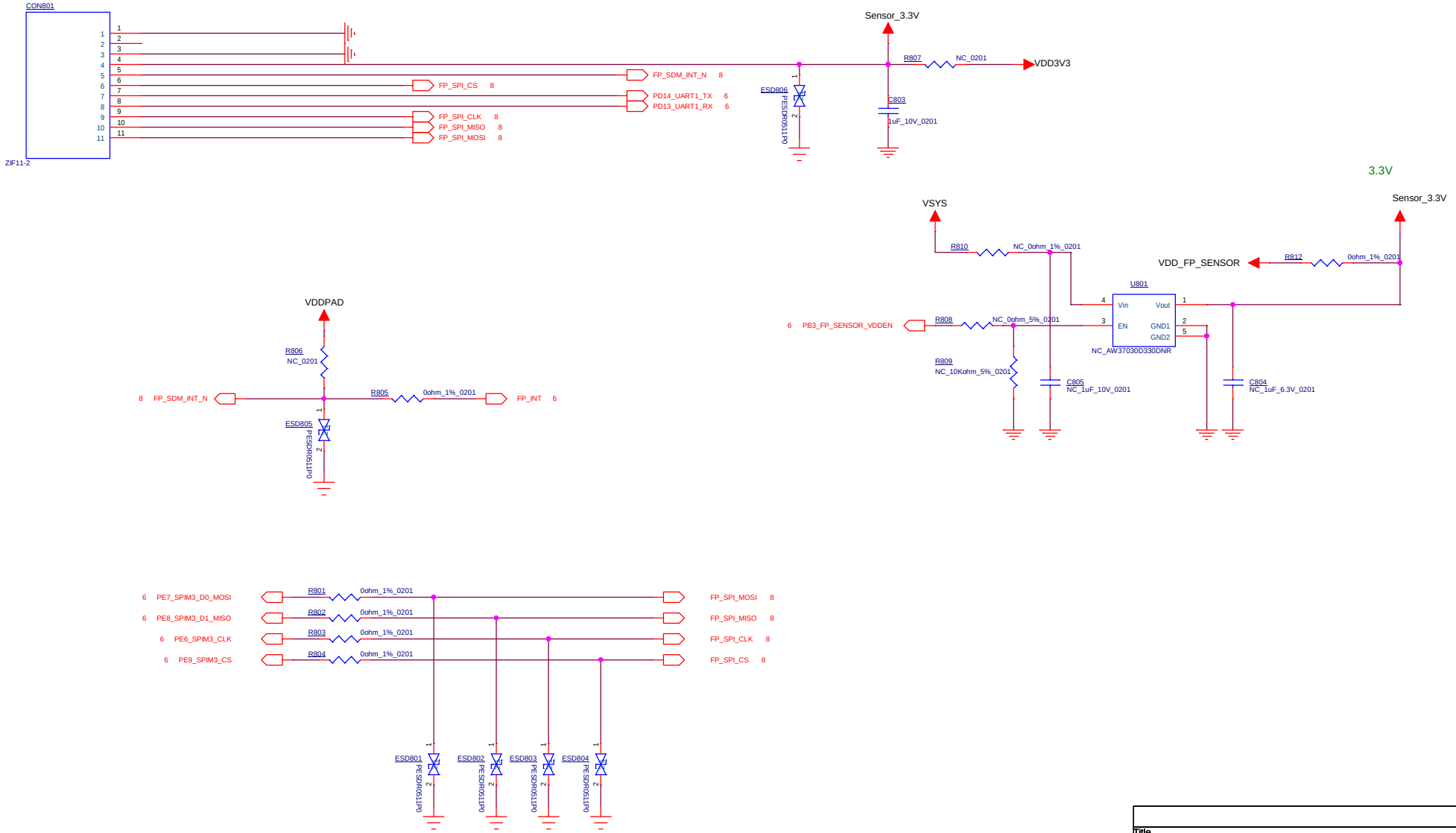

Title	08. Fingerprint	
Size B	Document Number <Doc>	Rev V2.0
Date: Wednesday, October 22, 2025	Sheet 8 of 10	

PDF 檔案使用 "pdfFactory Pro" 試用版本建立 www.pdffactory.com

Copyright © 2026 CrossBar, Inc.

Bluetooth (3.3V IO)

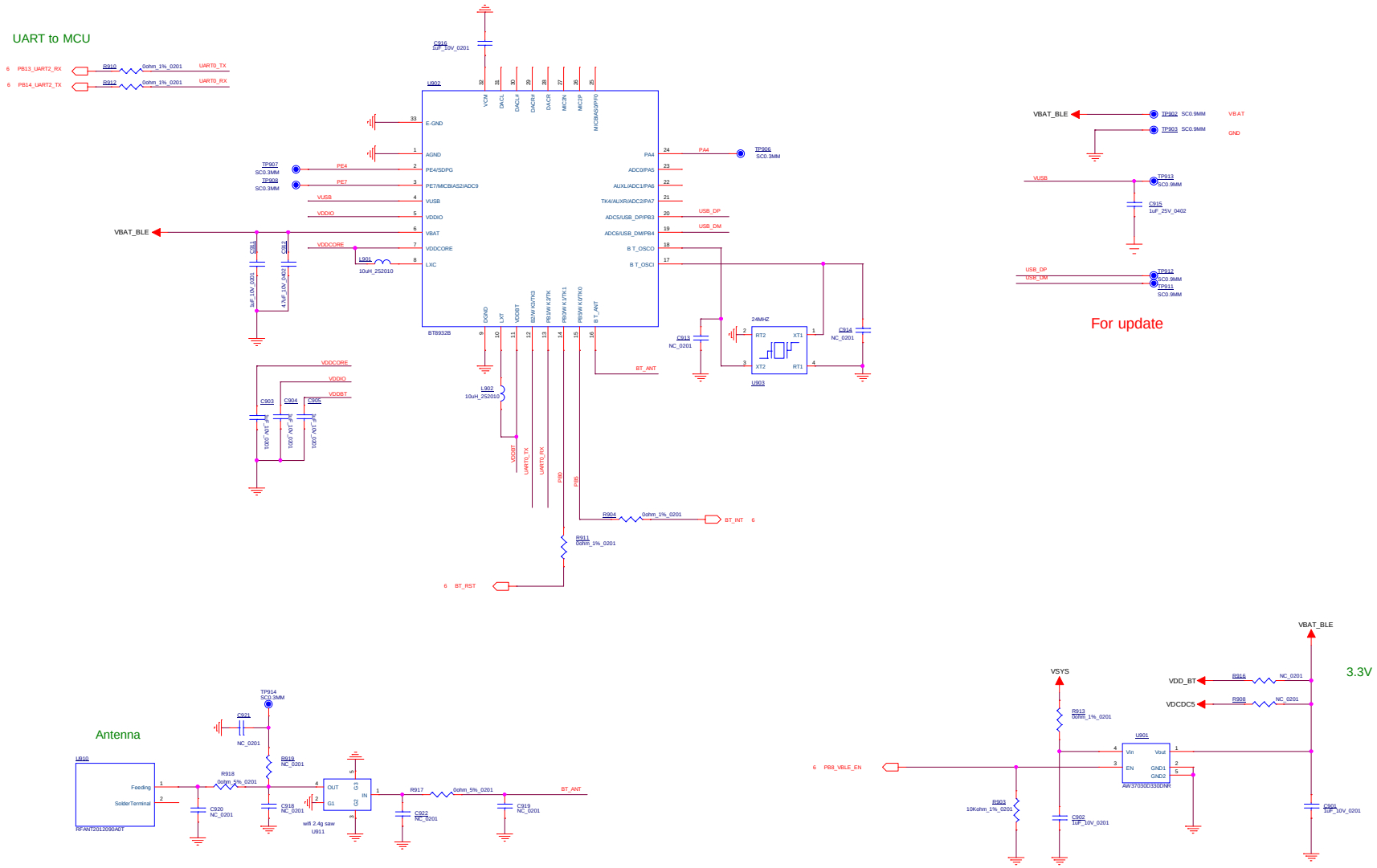

Title	09. Bluetooth	
Size C	Document Number <Doc>	Rev V2.0
Date: Wednesday, October 22, 2025	Sheet 9 of 10	

PDF 檔案使用 "pdfFactory Pro" 試用版本建立 www.pdffactory.com

Copyright © 2026 CrossBar, Inc.

QSPI FLASH (3.3V IO)

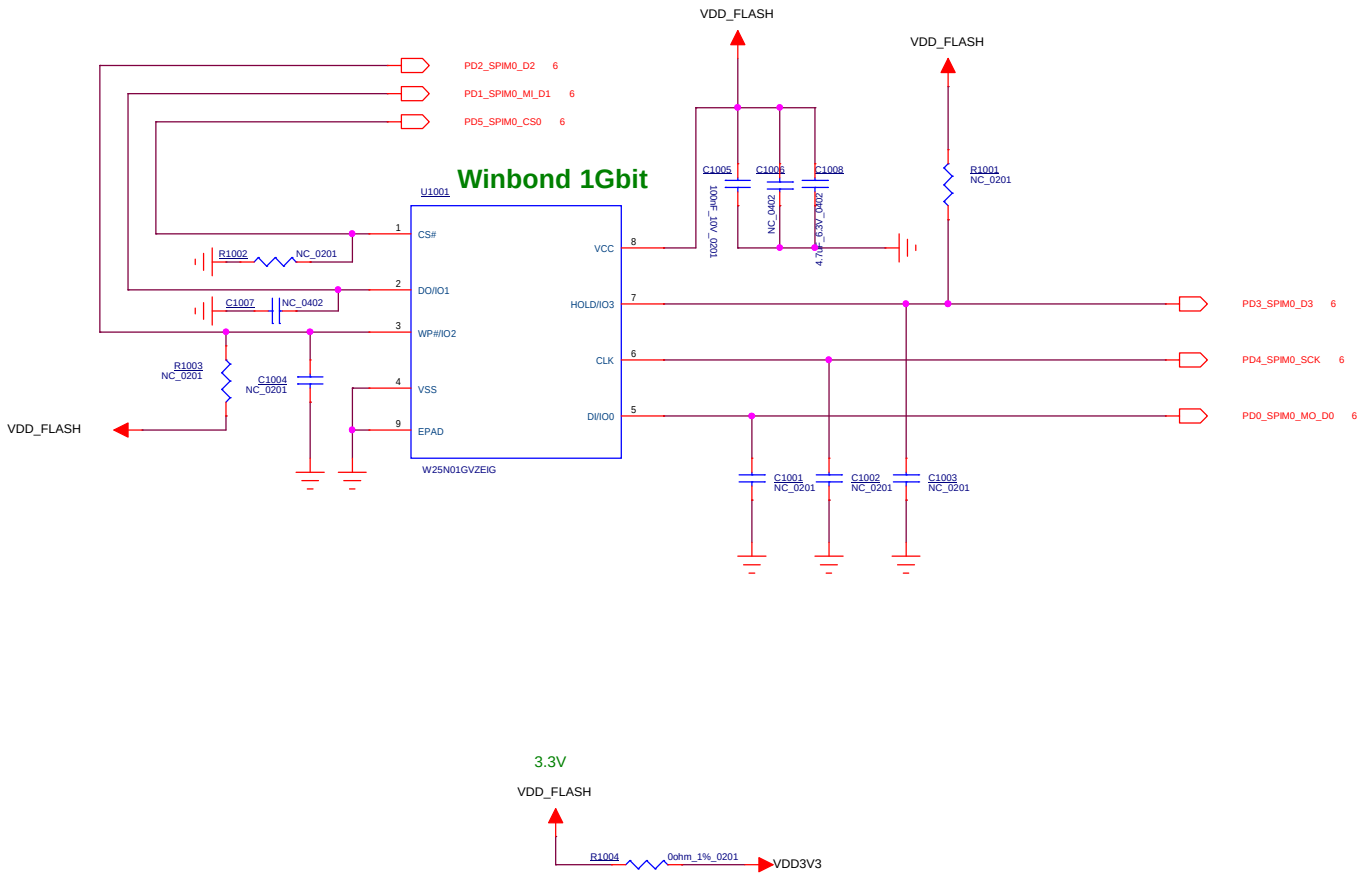

Title	10. FLASH		
Size B	Document Number <Doc>	V2.0	Rev
Date: Wednesday, October 22, 2025	Sheet 10 of 10		

PDF 檔案使用 "pdfFactory Pro" 試用版本建立 www.pdffactory.com

Copyright © 2026 CrossBar, Inc.