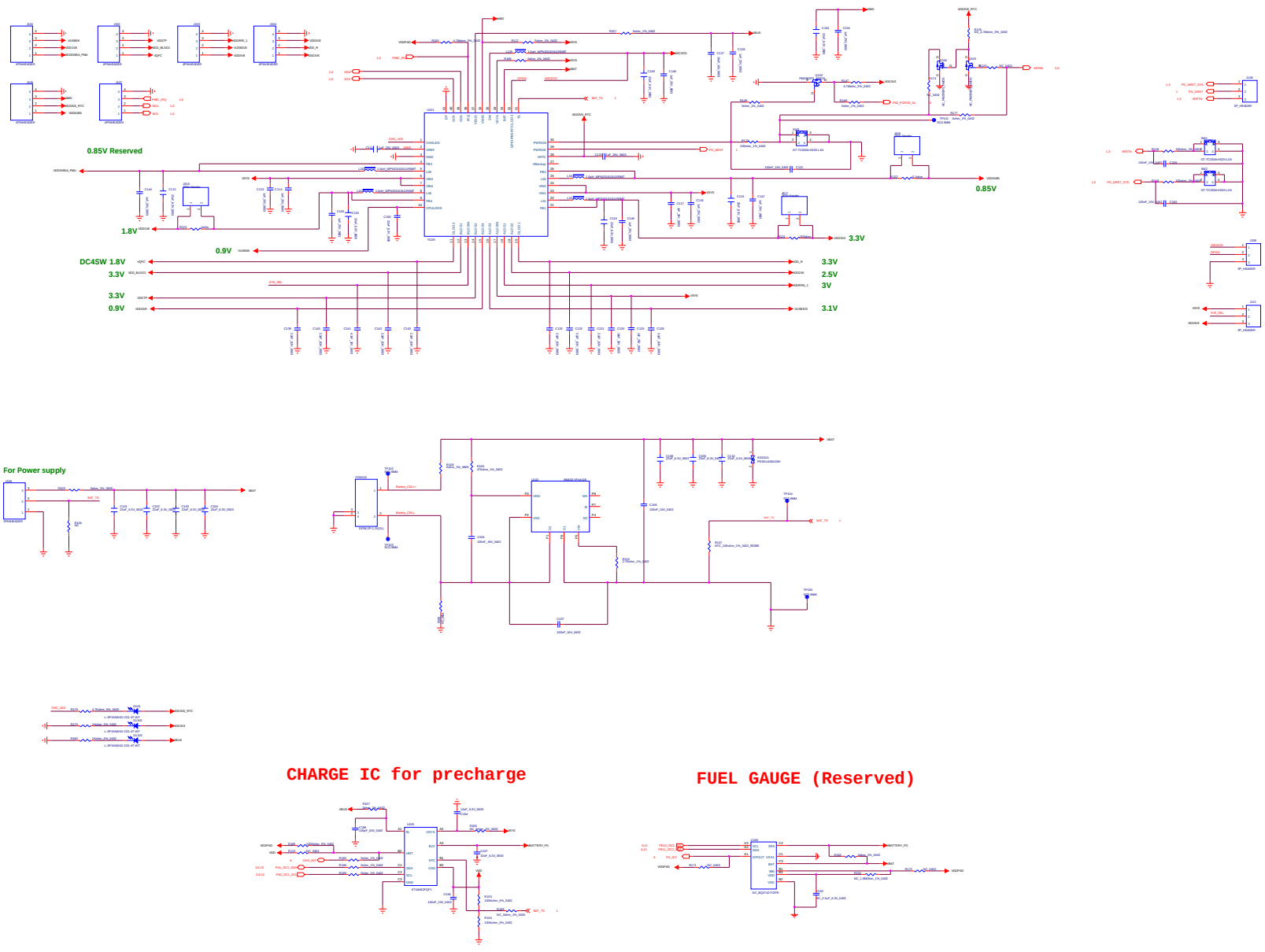

利用pdfFactory Pro??版本?建的PDF文? www.pdffactory.com

Copyright © 2026 CrossBar, Inc.

NTO Daric Power

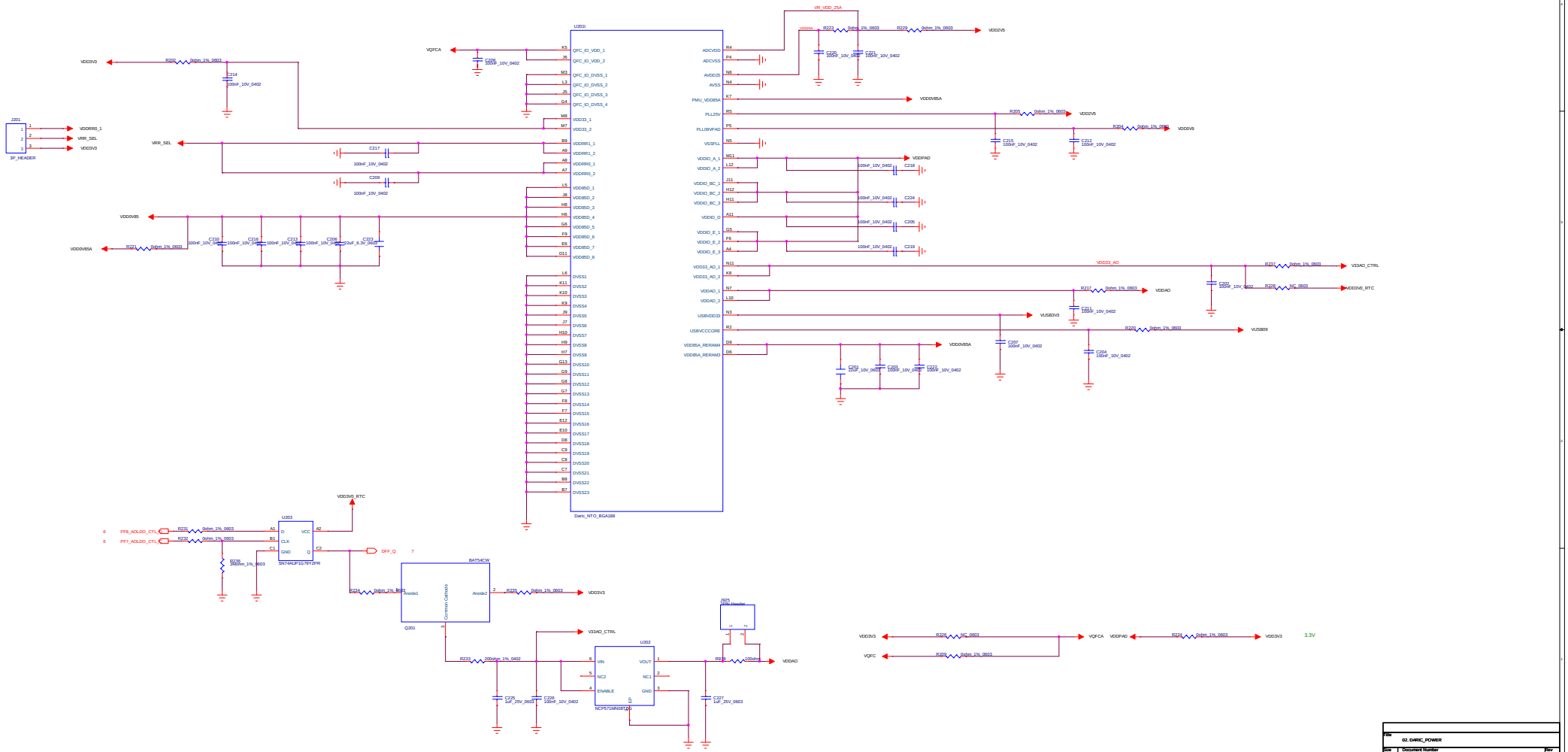

File	02. DARIC_POWER		
Size	Document Number		Rev
	Custom<Doc>		V4.0
Date:	Tuesday, April 07, 2026	Sheet 2 of 14	

利用pdfFactory Pro??版本?建的PDF文? www.pdffactory.com

Copyright © 2026 CrossBar, Inc.

NTO Daric System

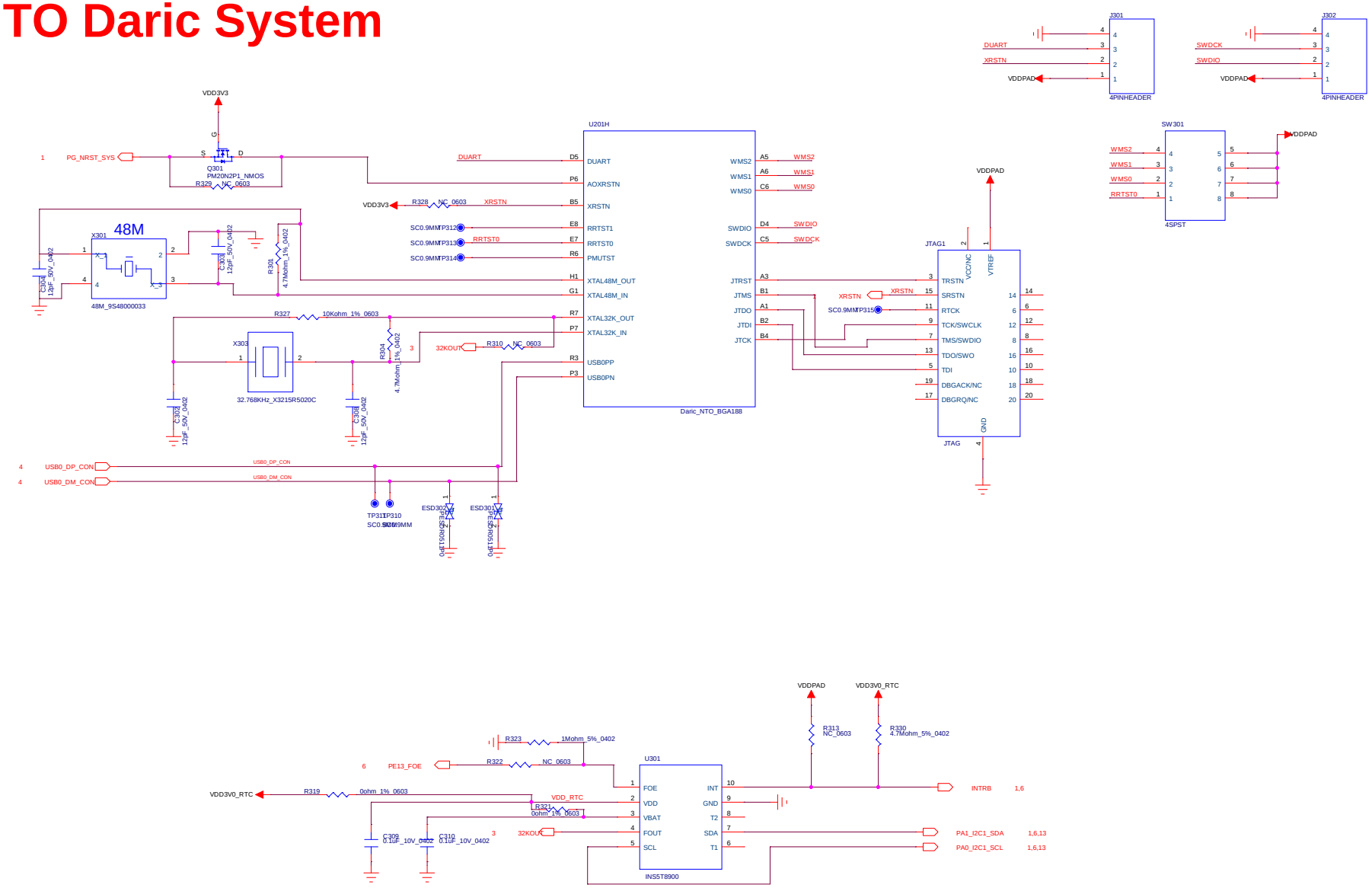

Title	03. DARIC_SYSTEM	
Size C	Document Number <Doc>	Rev V4.0
Date: Tuesday, April 07, 2026	Sheet 3 of 14	

利用pdfFactory Pro??版本?建的PDF文? www.pdffactory.com

Copyright © 2026 CrossBar, Inc.

USB

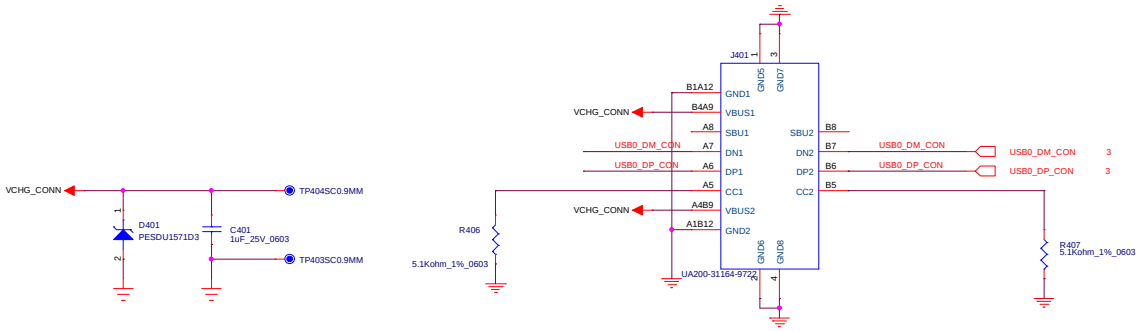

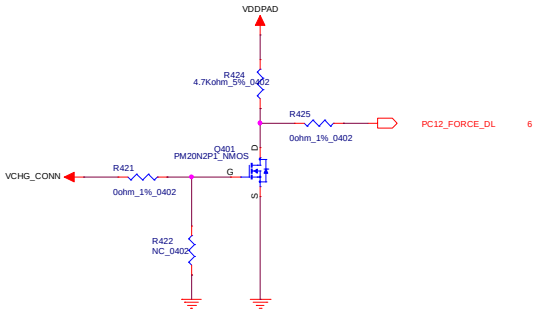

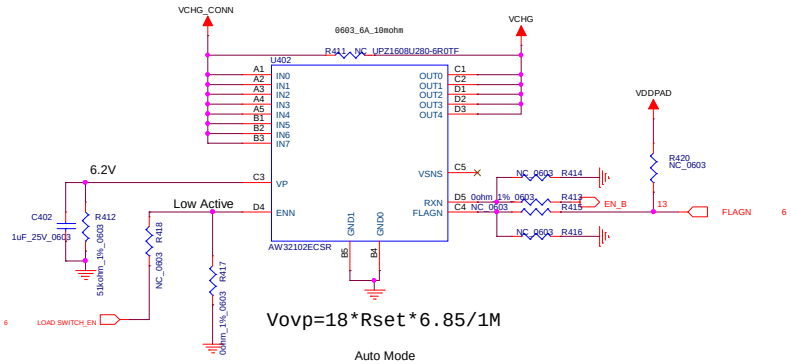

Title	04. DARIC_USB		
Size C	Document Number <Doc>		Rev V4.0
Date: Tuesday, April 07, 2026		Sheet 4 of 14	

利用pdfFactory Pro??版本?建的PDF文? www.pdffactory.com

Copyright © 2026 CrossBar, Inc.

NTO DARIC QFC

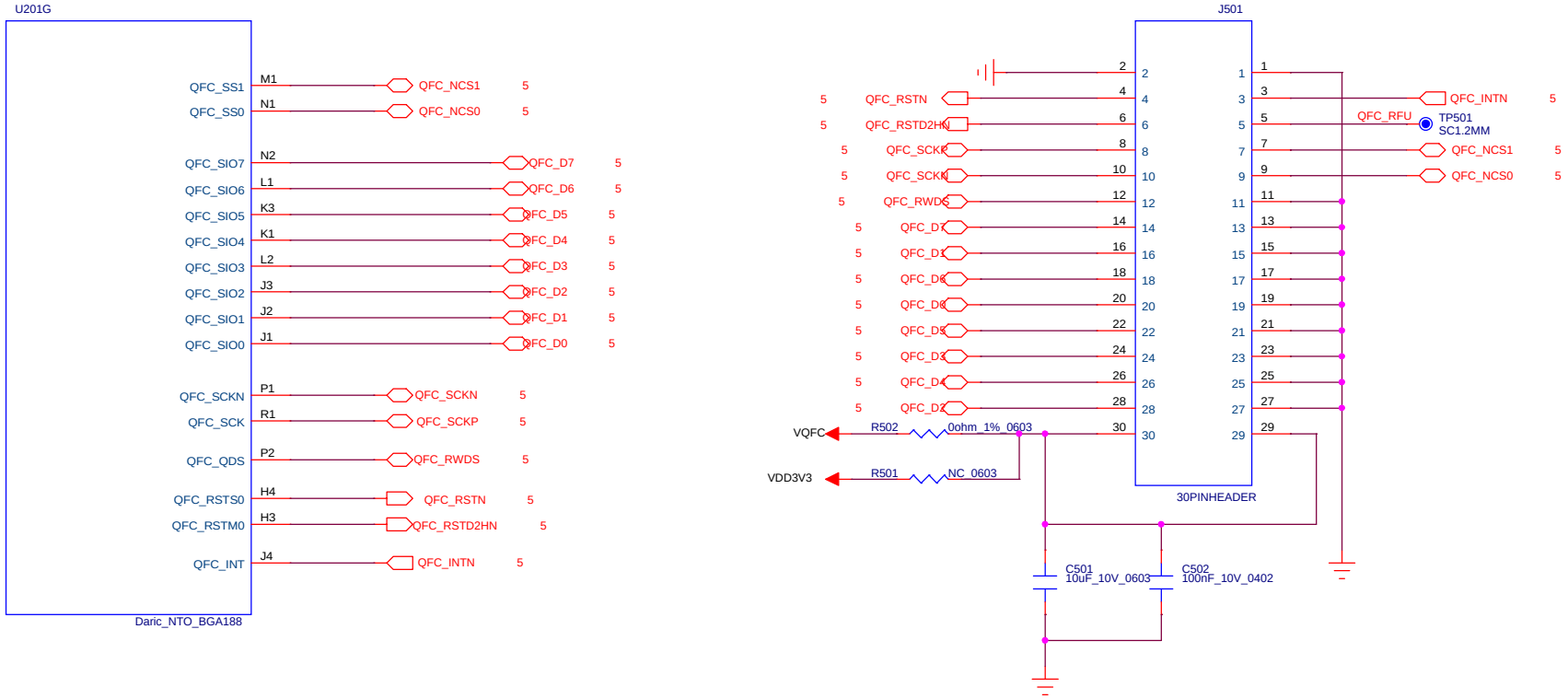

Title	05. DARIC_QFC		
Size B	Document Number <Doc>		Rev V4.0
Date: Tuesday, April 07, 2026		Sheet 5 of 14	

利用pdfFactory Pro??版本?建的PDF文? www.pdffactory.com

Copyright © 2026 CrossBar, Inc.

NTO DARIC_Peripheral

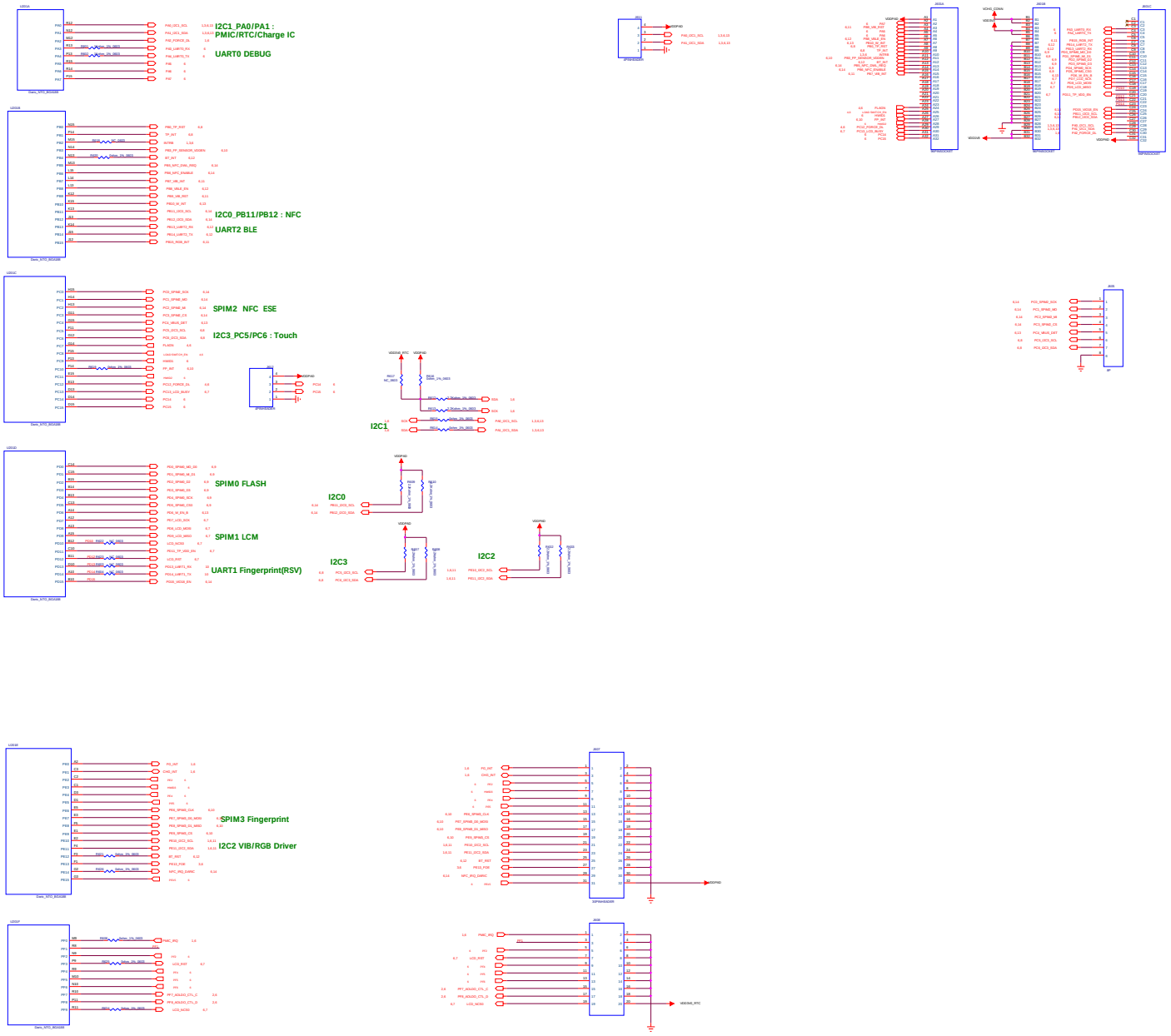

利用pdfFactory Pro??版本?建的PDF文? www.pdffactory.com

Copyright © 2026 CrossBar, Inc.

E-INK LCM (3.3V IO)

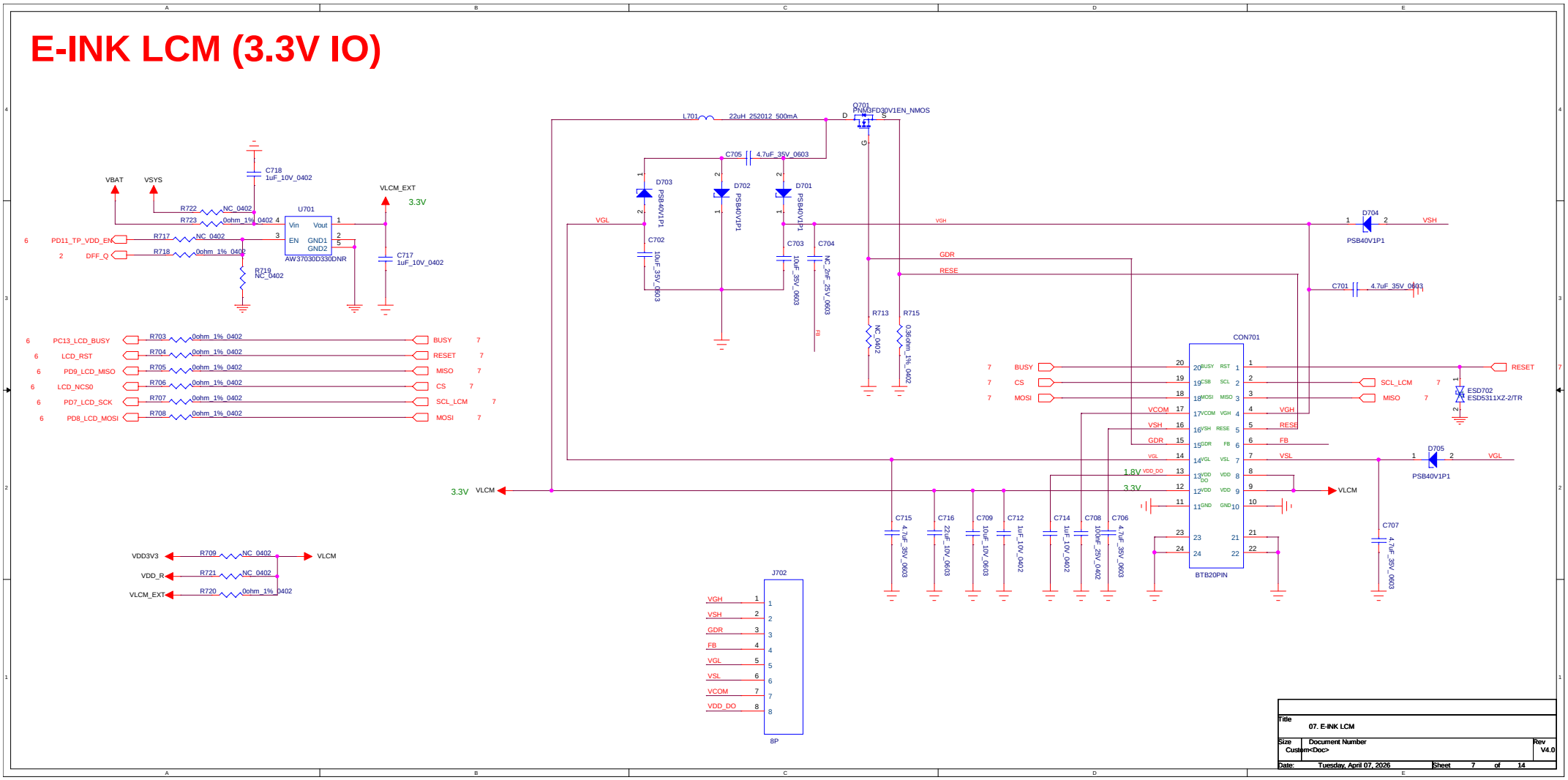

利用pdfFactory Pro??版本?建的PDF文? www.pdffactory.com

Copyright © 2026 CrossBar, Inc.

Touch panel(3.3V IO)

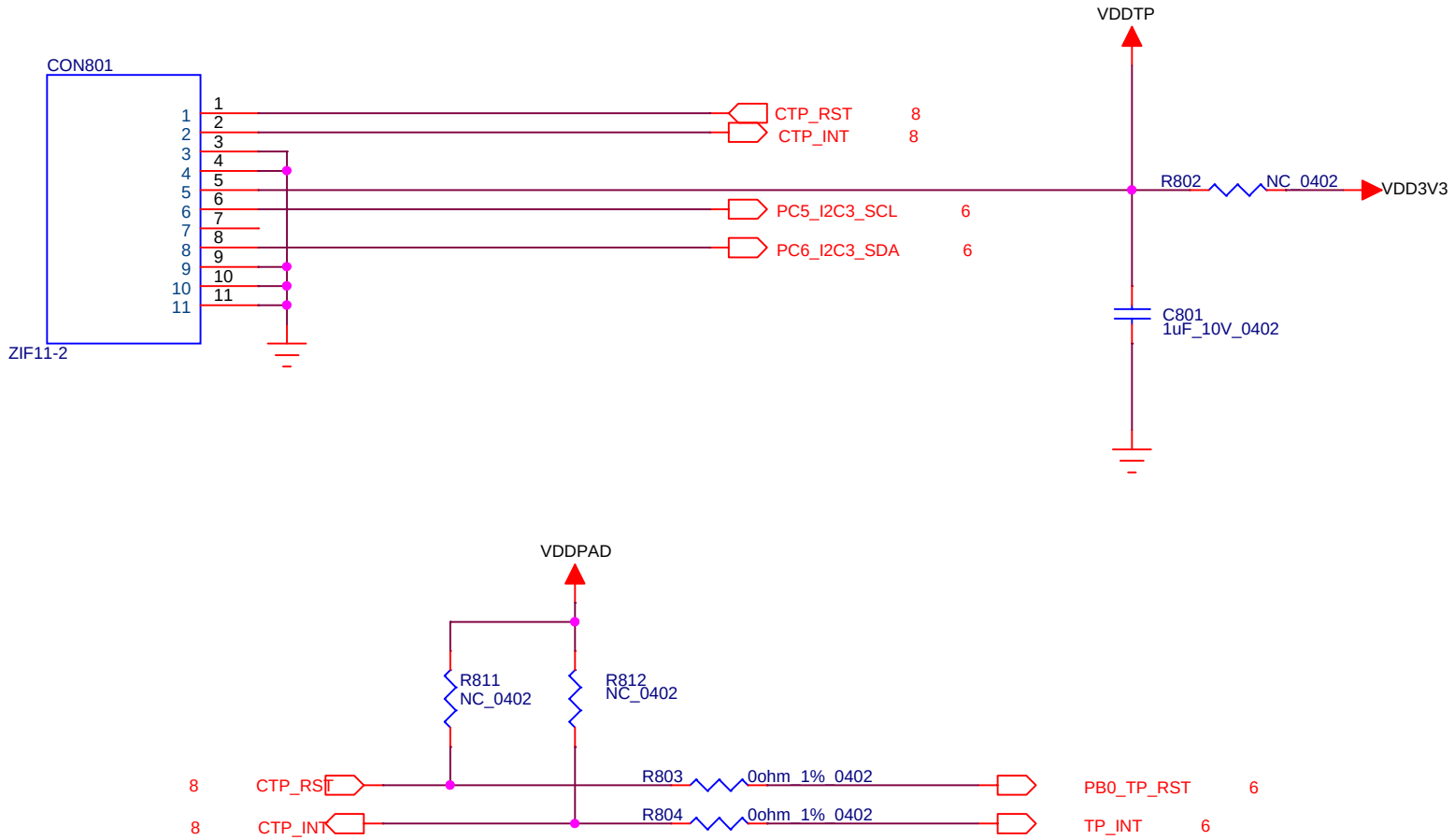

Title	08. Touch	
Size A	Document Number <Doc>	Rev V4.0
Date: Tuesday, April 07, 2026	Sheet 8 of 14	

利用pdfFactory Pro??版本?建的PDF文? www.pdffactory.com

Copyright © 2026 CrossBar, Inc.

QSPI FLASH (3.3V IO)

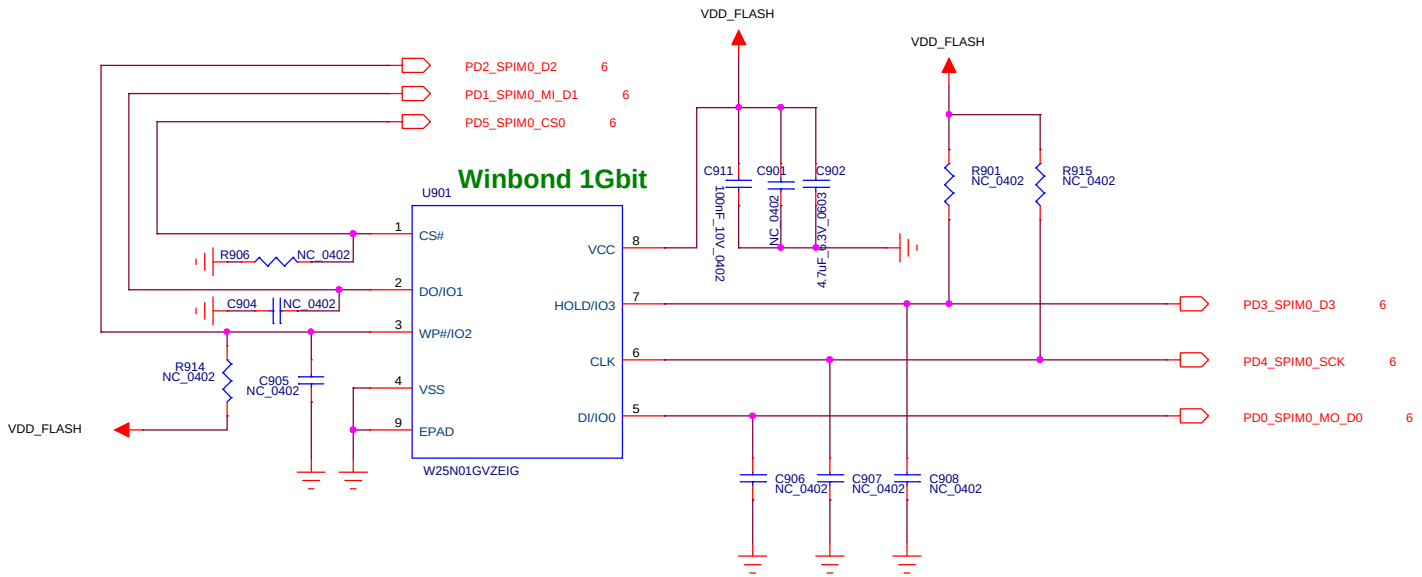

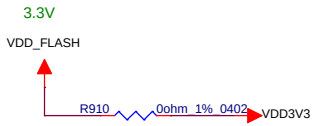

Title	09. QSPI FLASH	
Size B	Document Number <Doc>	Rev V4.0
Date: Tuesday, April 07, 2026	Sheet 9 of 14	

利用pdfFactory Pro??版本?建的PDF文? www.pdffactory.com

Copyright © 2026 CrossBar, Inc.

Fingerprint sensor (3.3V IO)

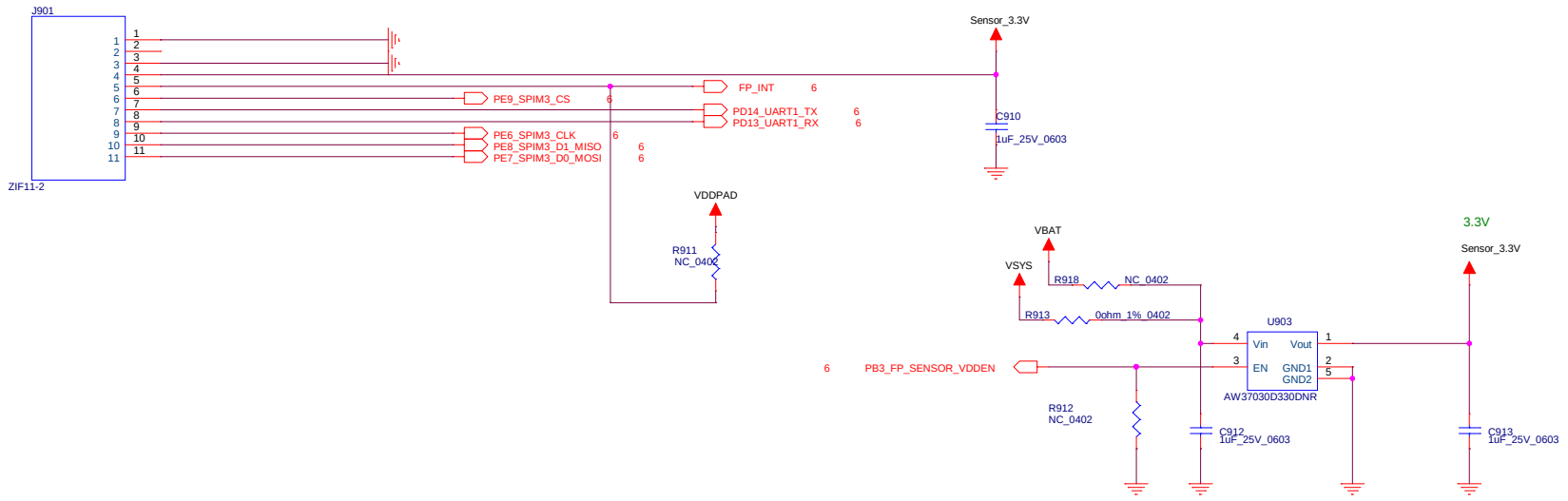

Title	10. Fingerprint		
Size Custom	Document Number <Doc>		Rev V4.0
Date: Tuesday, April 07, 2026		Sheet 10 of 14	

利用pdfFactory Pro??版本?建的PDF文? www.pdffactory.com

Copyright © 2026 CrossBar, Inc.

Vibrator(3.3V IO)

I2C0 address:0x5A

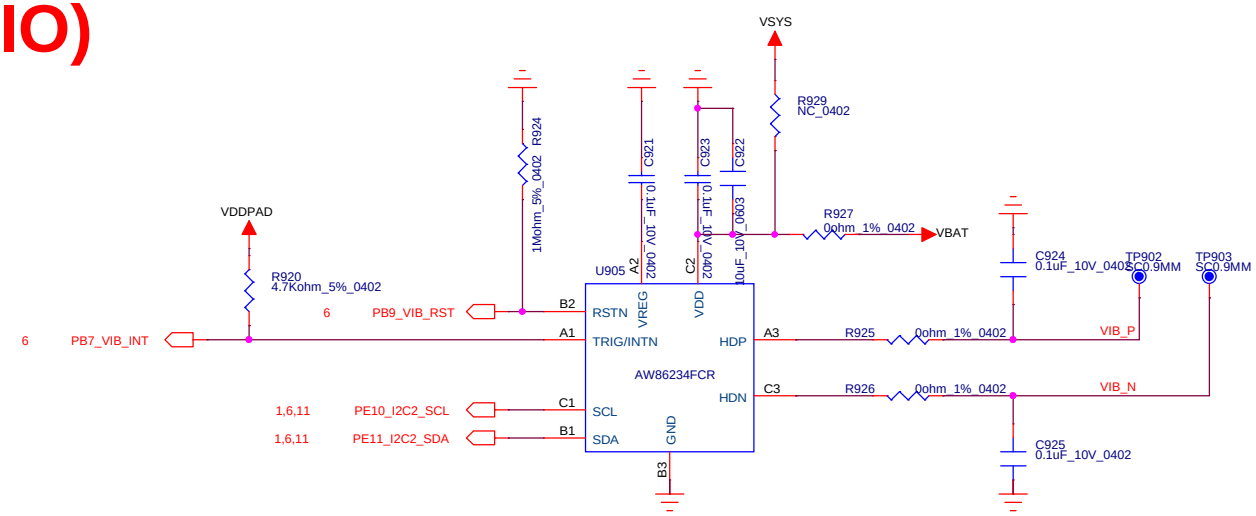

RGB Driver(3.3V IO)

I2C0 address:0X45

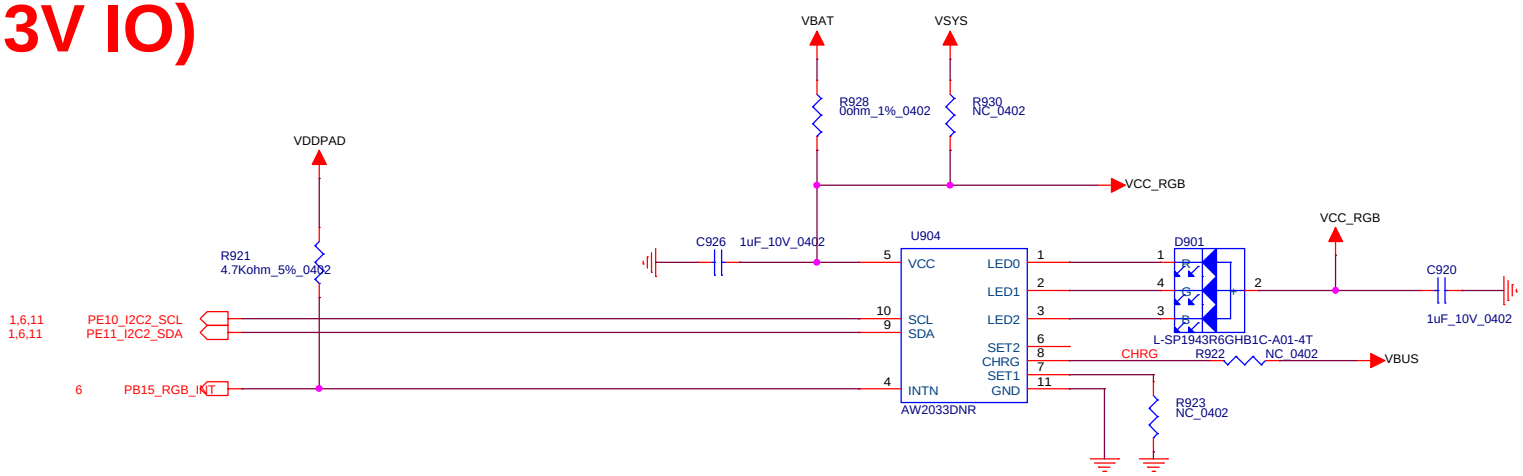

Title	11. Gsensor/RGB LED	
Size B	Document Number <Doc>	Rev V4.0
Date: Tuesday, April 07, 2026	Sheet 11 of 14	

利用pdfFactory Pro??版本?建的PDF文? www.pdffactory.com

Copyright © 2026 CrossBar, Inc.

Bluetooth (3.3V IO)

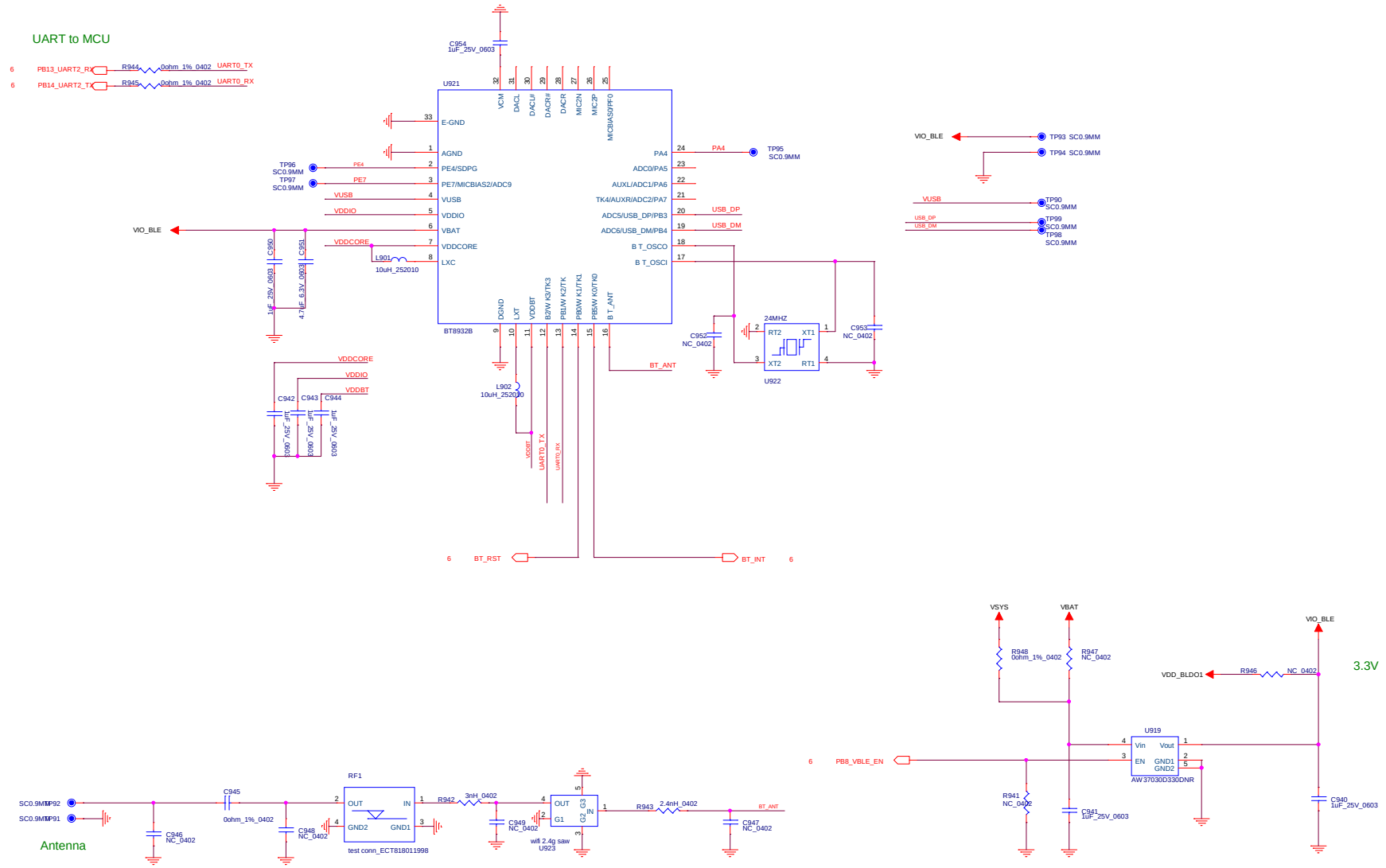

Title	12. Bluetooth
Size C	Document Number <Doc>
Rev	V4.0
Date: Tuesday, April 07, 2026	Sheet 12 of 14

利用pdfFactory Pro??版本?建的PDF文? www.pdffactory.com

Copyright © 2026 CrossBar, Inc.

Wireless Charge(3.3V IO)

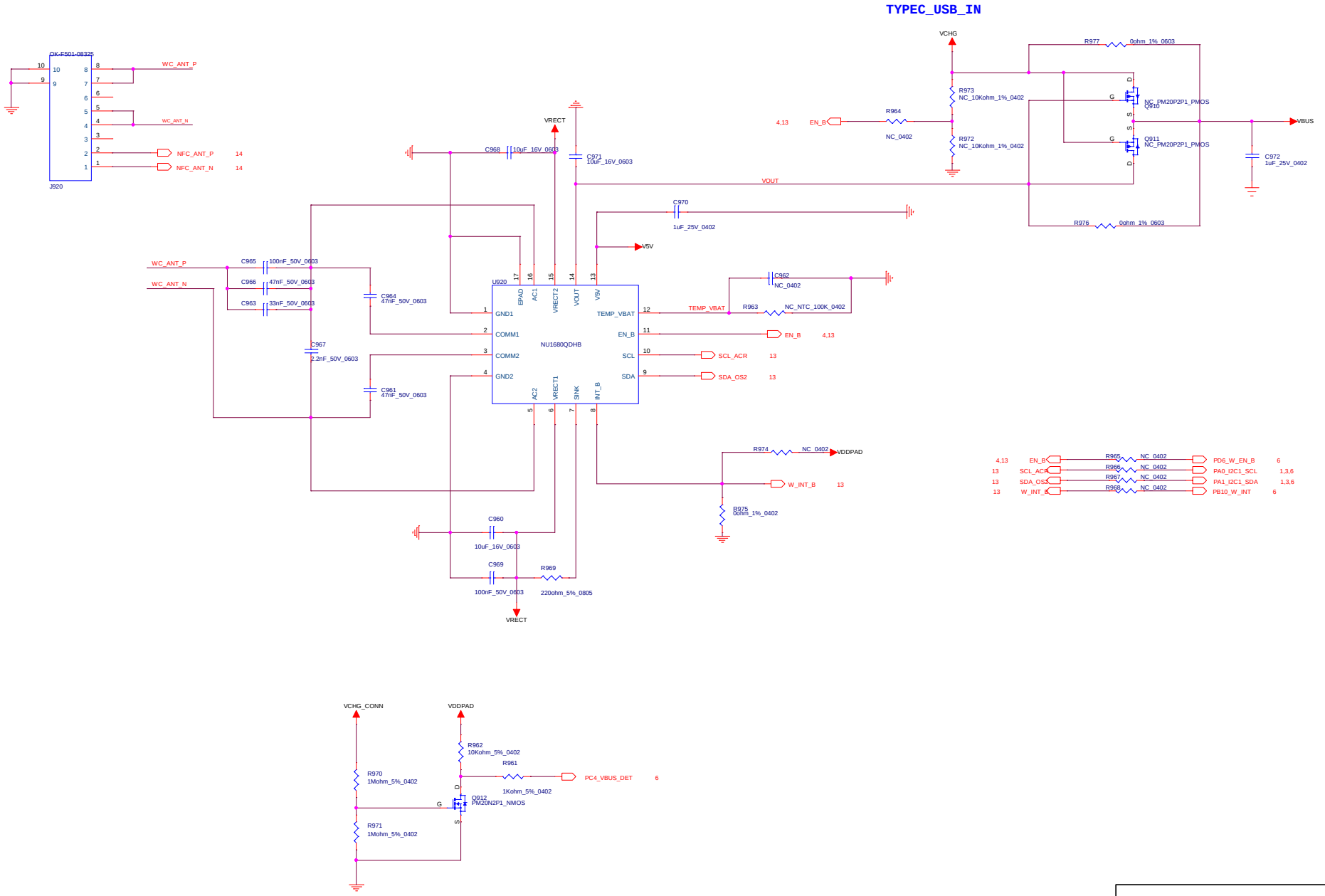

Title	13. Wireless Charger	
Size C	Document Number <Doc>	Rev V4.0
Date: Tuesday, April 07, 2026	Sheet 13 of 14	

利用pdfFactory Pro??版本?建的PDF文? www.pdffactory.com

Copyright © 2026 CrossBar, Inc.

NFC(1.8V IO)

I2C1 address : 0x28(7-bit)

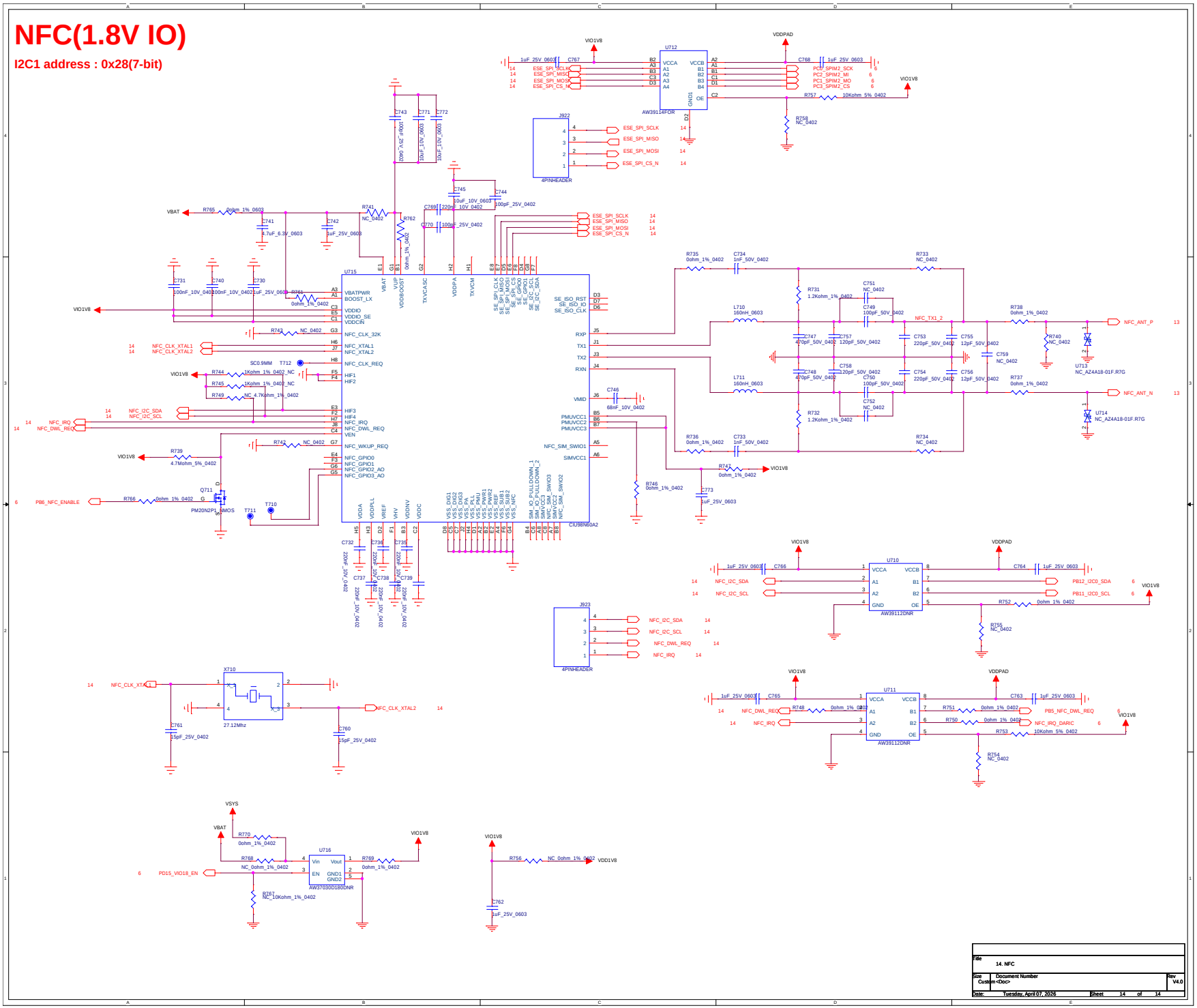

利用pdfFactory Pro??版本?建的PDF文? www.pdffactory.com

Copyright © 2026 CrossBar, Inc.