PMIC TG28

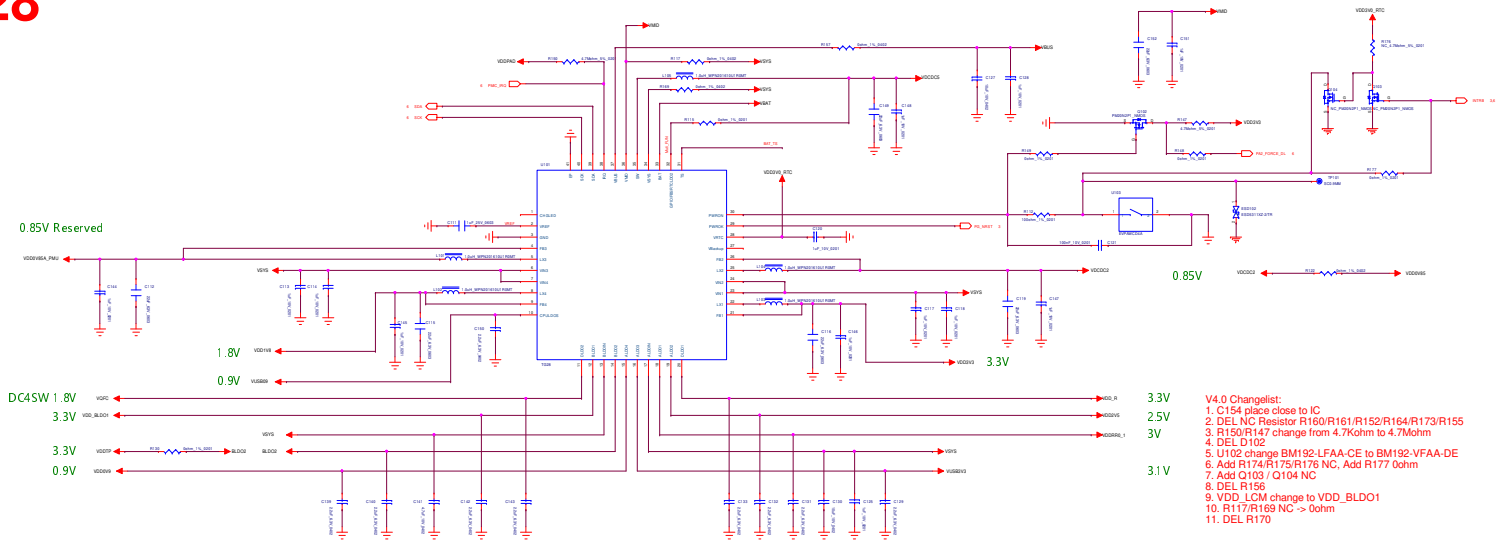

V4.0 Changelist:
1. C154 place close to IC
2. DEL NC Resistor R160/R161/R152/R164/R173/R155
3. R150/R147 change from 4.7Kohm to 4.7Mohm
4. DEL D102
5. U102 change BM192-LFAA-CE to BM192-VFAA-DE
6. Add R174/R175/R176 NC, Add R177 0ohm
7. Add Q103 / Q104 NC
8. DEL R156
9. VDD_LCM change to VDD_BLDO1
10. R117/R169 NC -> 0ohm
11. DEL R170

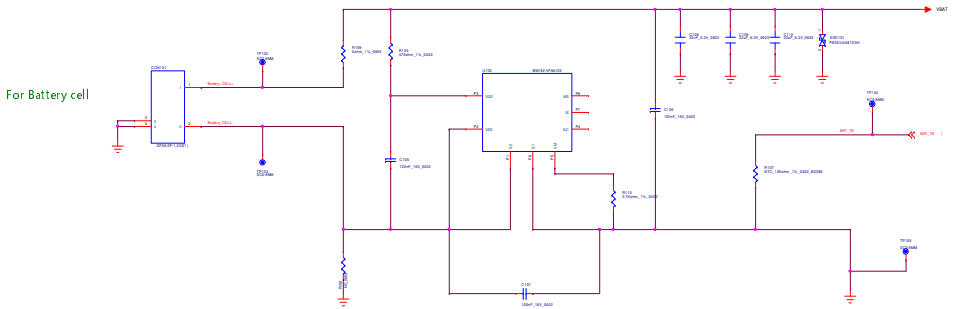

CHARGE IC for precharge

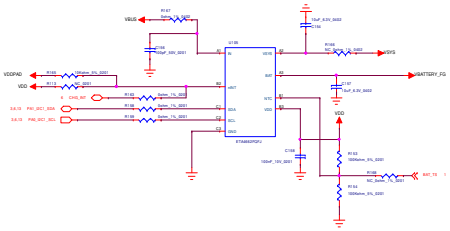

FUEL GAUGE (Reserved)

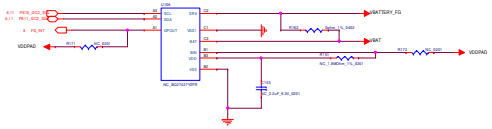

Copyright © 2026 CrossBar, Inc.

NTO Daric Power

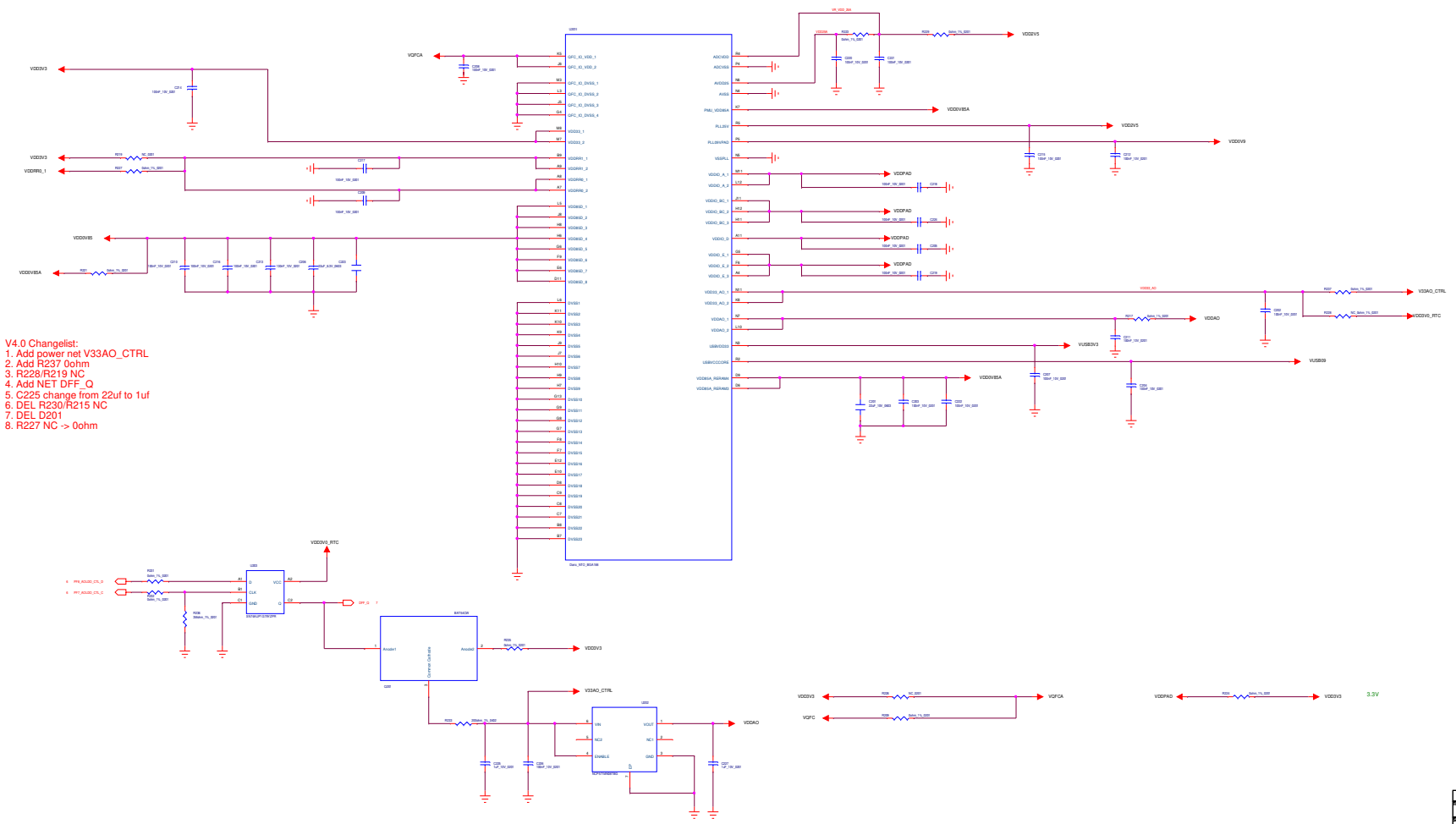

V4.0 Changelist:
1. Add power net V33AO_CTRL
2. Add R237 0ohm
3. R228/R219 NC
4. Add NET DFF_Q
5. C225 change from 22uf to 1uf
6. DEL R230/R215 NC
7. DEL D201
8. R227 NC -> 0ohm

Title	02 DARIC_POWER		
Size	Document Number		Rev
Custom	<Doc>		V4.0
Date:	Monday, February 09, 2026	Sheet 2 of 13	

Copyright © 2026 CrossBar, Inc.

NTO Daric System

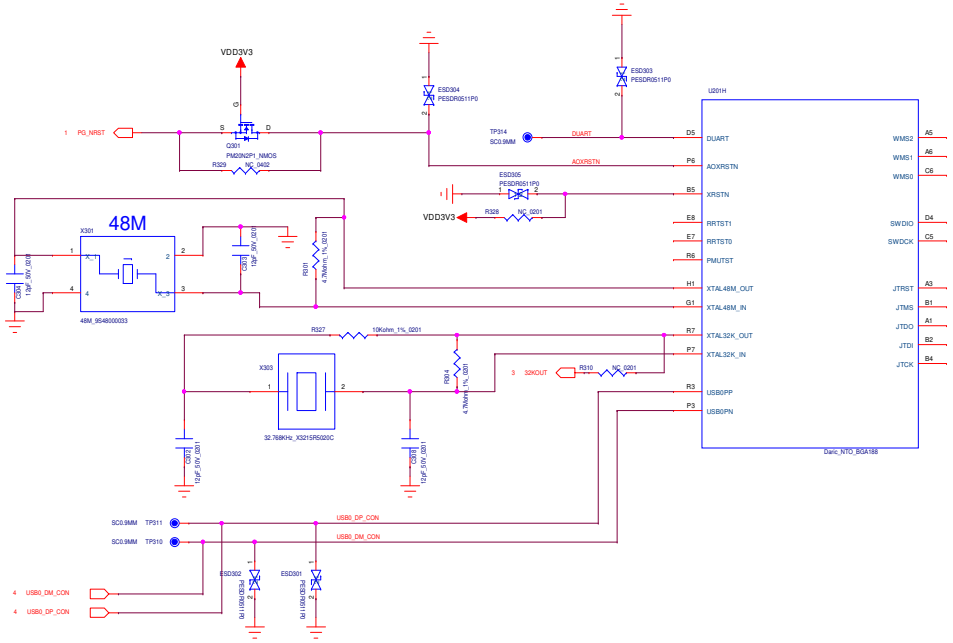

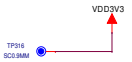

V4.0 Changelist:
1. Add Q301 NMOS
2. R327 change from 0ohm to 10Kohm
3. PC15_FOE change to PE13_FOE
4. Add ESD303/ESD304
5. DEL R309/R326
6. DEL R320 NC
7. Add R330 4.7Mohm
8. Add R329 0ohm
9. DEL TP317/TP318/TP319/TP320
10. DEL R305/R306/R307/R308
11. DEL TP301/TP302/TP303/TP304/TP305/TP312/TP313
12. DEL R313

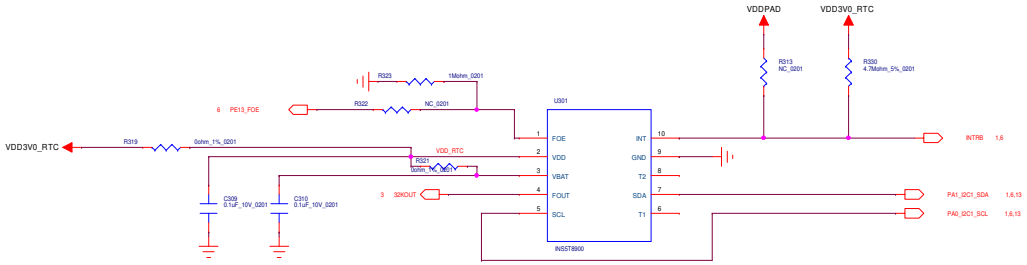

Title	03. DARIC_SYSTEM		
Size C	Document Number <Doc>		Rev V4.0
Date: Monday, February 09, 2026		Sheet 3 of 14	

Copyright © 2026 CrossBar, Inc.

USB

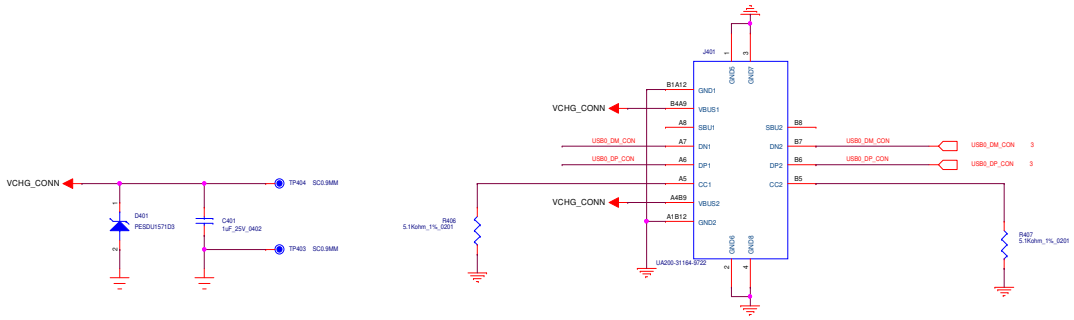

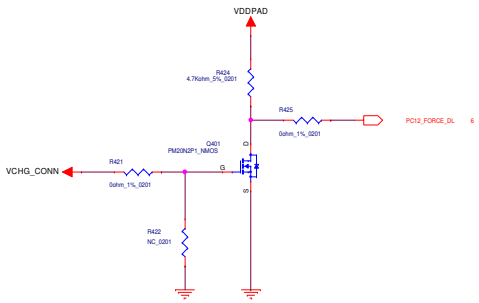

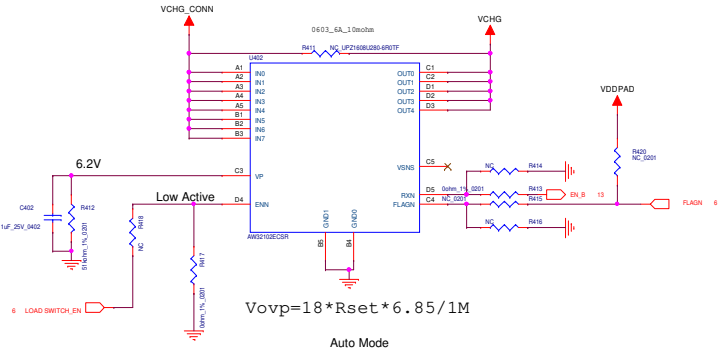

Title	04. DARIC_USB	
Size C	Document Number <Doc>	Rev V4.0
Date: Monday, February 09, 2026	Sheet 4 of 14	

Copyright © 2026 CrossBar, Inc.

NTO DARIC QFC

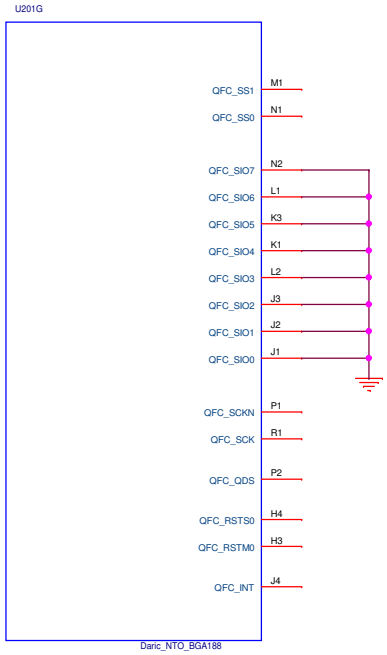

Title	05. DARIC_QFC	
Size B	Document Number <Doc>	Rev V4.0
Date: Monday, February 09, 2026	Sheet 5 of 14	

Copyright © 2026 CrossBar, Inc.

NTO DARIC_Peripheral

V4.0 Changelist:
1. PC15_FOE change to PE13_FOE
2. BT_RST change from PC14 to PE12
3. Add TP604
4. R1469 NC
5. DEL R1470/R619/R625/R629/R1471/R1472
6. R635 10K / R637 NC
7. Add R1490/R1491/R1494 NC
8. Add net HWID3
9. Add R1495/R1493/R1492 0ohm
10. Add R1488/R1489
11. R622/R623/R626/R627 NC

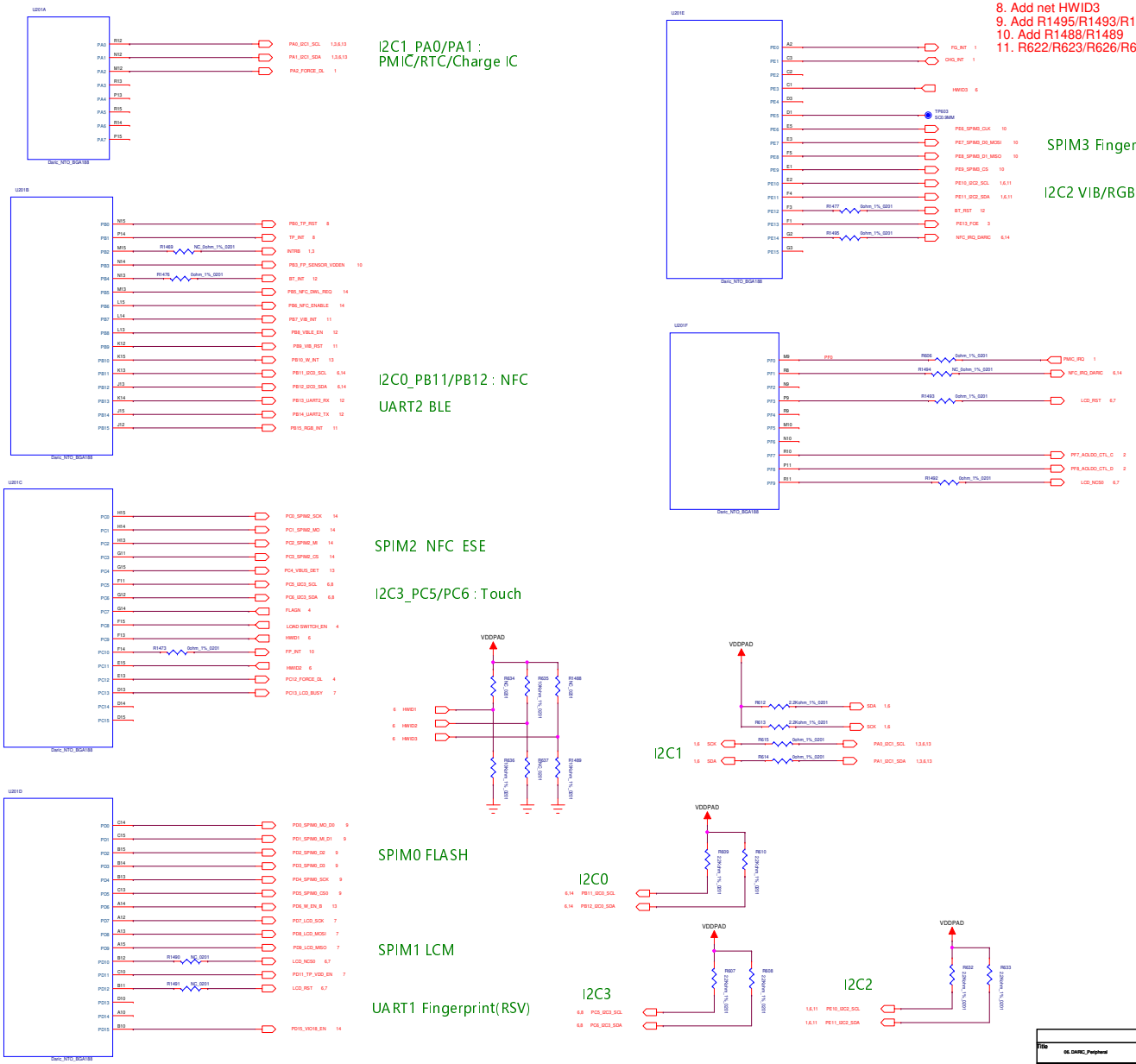

File	06. DARIC_Peripheral		
Size	Document Number		Rev
Code	<Doc>		V4.0
Date:	Monday, February 09, 2026	Sheet 6 of 14	

Copyright © 2026 CrossBar, Inc.

E-INK LCM (3.3V IO)

V4.0 Changelist:
1. Add R717/R719 NC
2. Add R718 0ohm
3. U701 change from NC to 3.3V LDO
4. Add net DFF_Q to Control the LDO
5. R721 NC
6. DEL R716 (NC)
7. Add R722(NC) / R723 0ohm
8. Add C717/C718 1uF

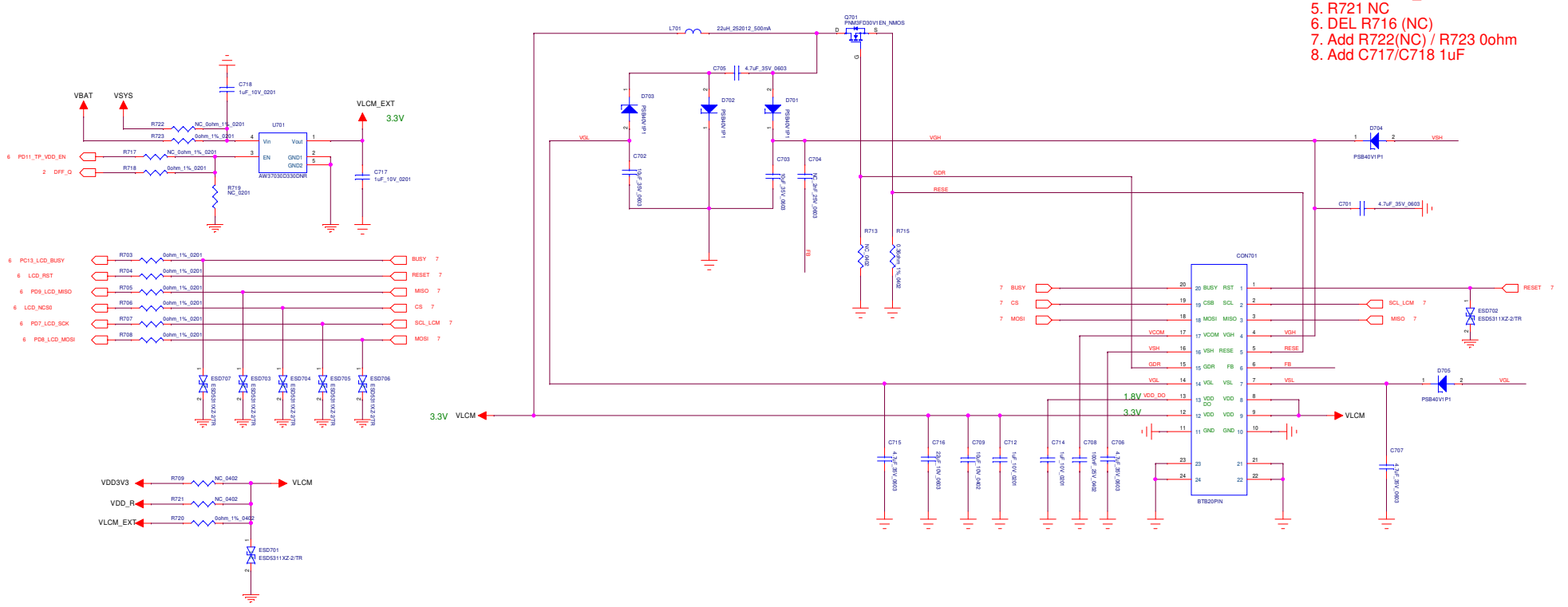

Title	07. E-INK LCM	
Size: Custom	Document Number: <Doc>	Rev: V4.0
Date: Monday, February 09, 2026	Sheet 7 of 14	

Copyright © 2026 CrossBar, Inc.

Touch panel(3.3V IO)

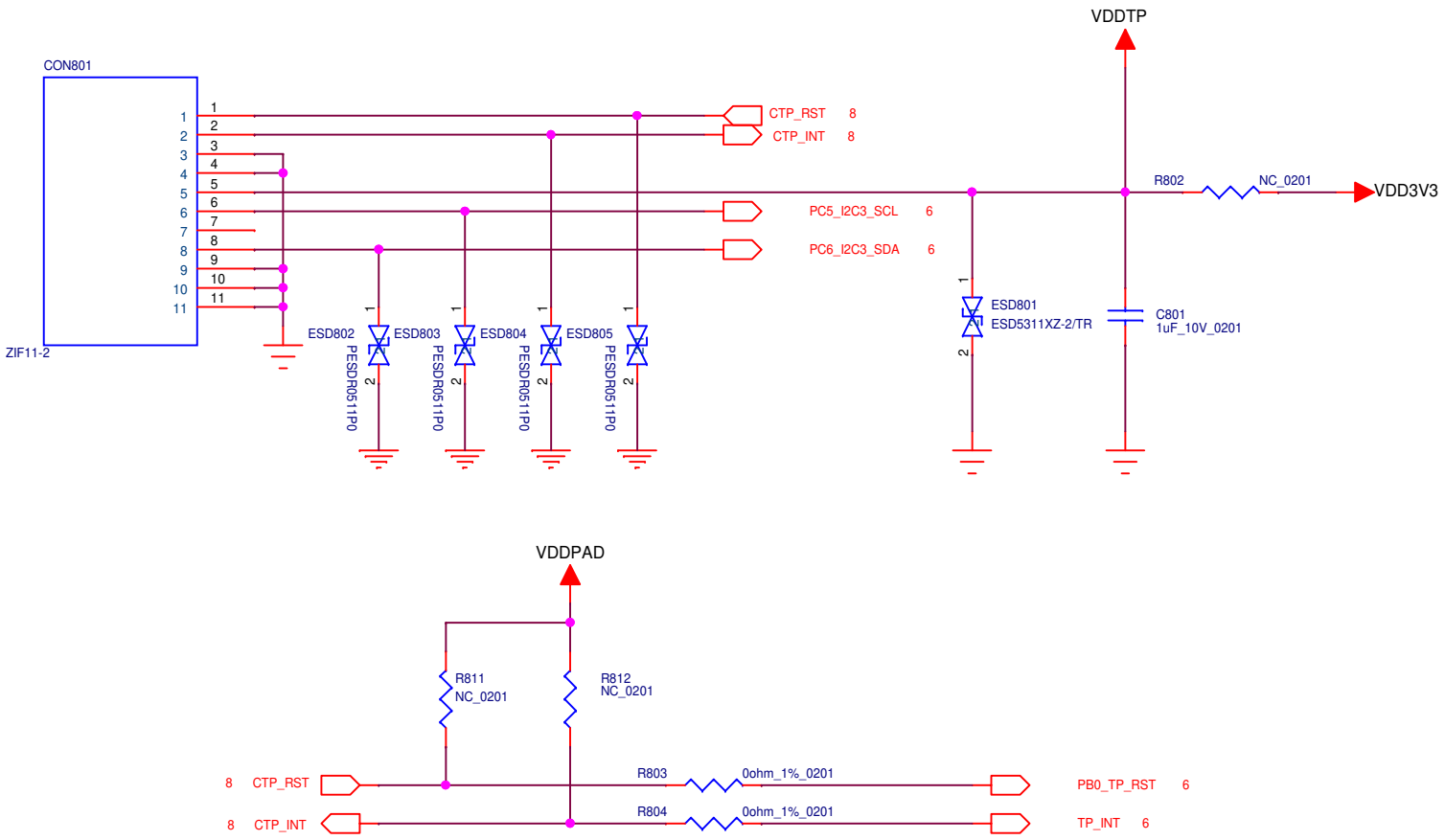

Title	08. Touch	
Size A	Document Number <Doc>	Rev V4.0
Date: Monday, February 09, 2026	Sheet 8 of 14	

Copyright © 2026 CrossBar, Inc.

QSPI FLASH (3.3V IO)

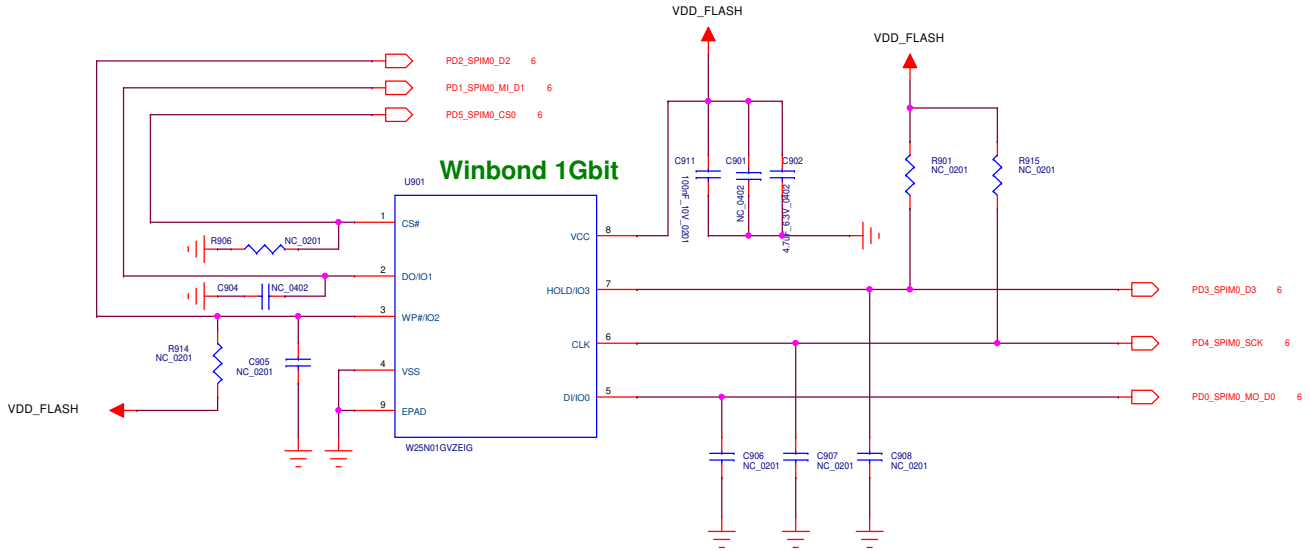

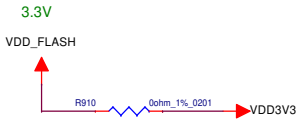

Title	09. QSPI FLASH	
Size B	Document Number <Doc>	Rev V4.0
Date: Monday, February 09, 2026	Sheet 9 of 14	

Copyright © 2026 CrossBar, Inc.

Fingerprint sensor (3.3V IO)

V4.0 Changelist:
1. DEL R1023
2. R1025 NC / R1024 0ohm
3. R1019 NC

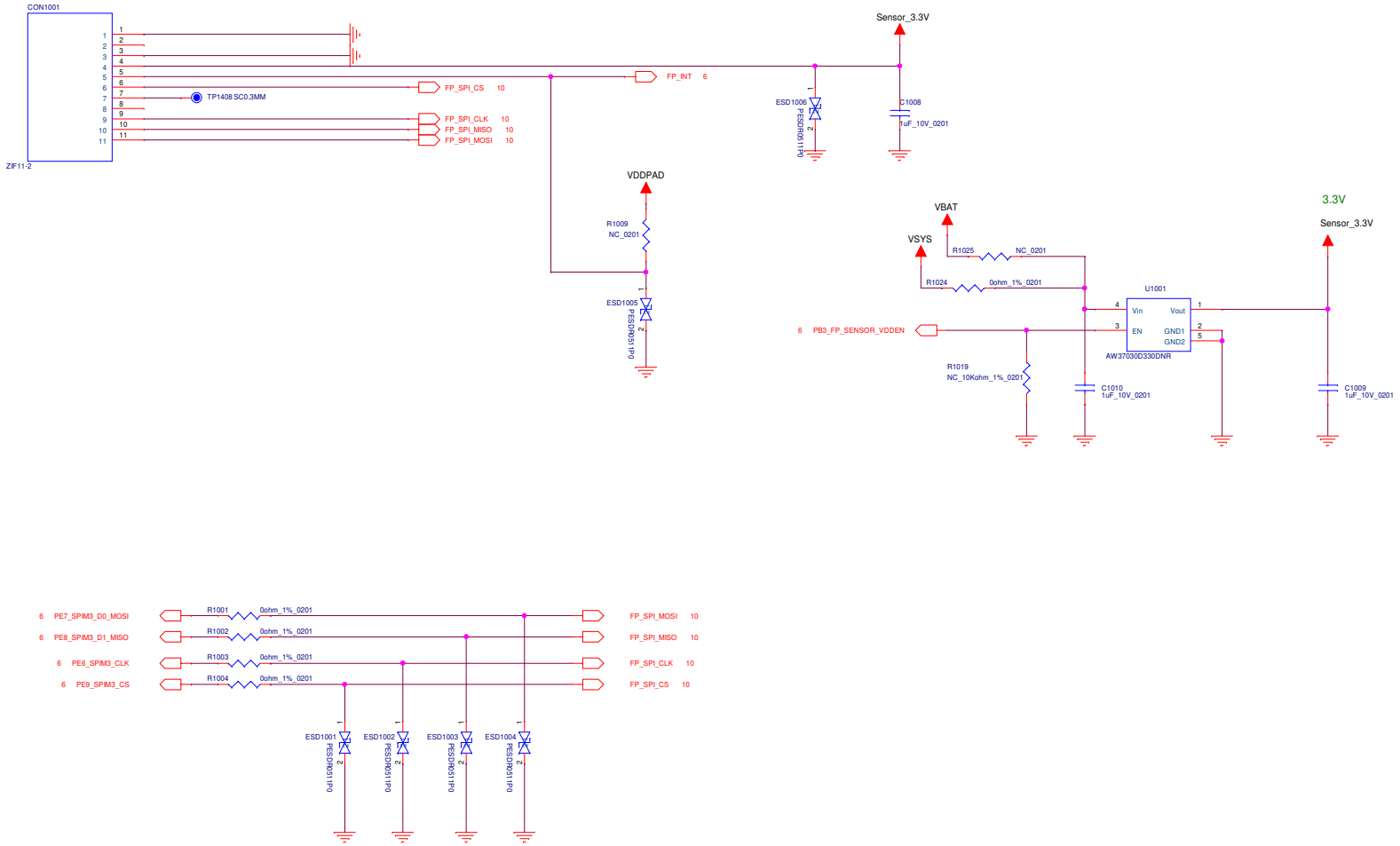

Title	10. Fingerprint	
Size: Custom	Document Number: <Doc>	Rev: V4.0
Date: Monday, February 09, 2026	Sheet 10 of 14	

Copyright © 2026 CrossBar, Inc.

Vibrator(3.3V IO)

I2C0 address:0x5A

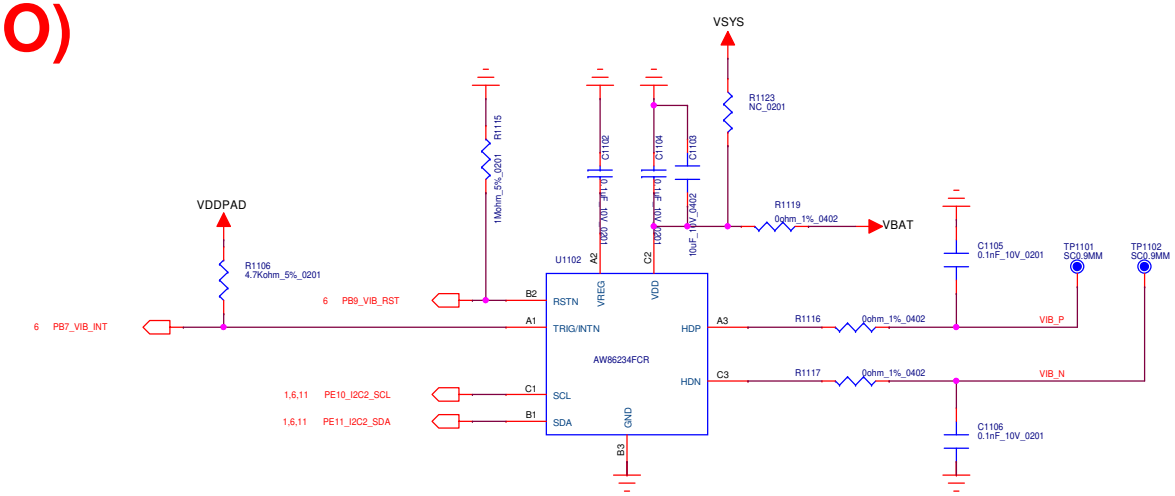

RGB Driver(3.3V IO)

I2C0 address:0X45

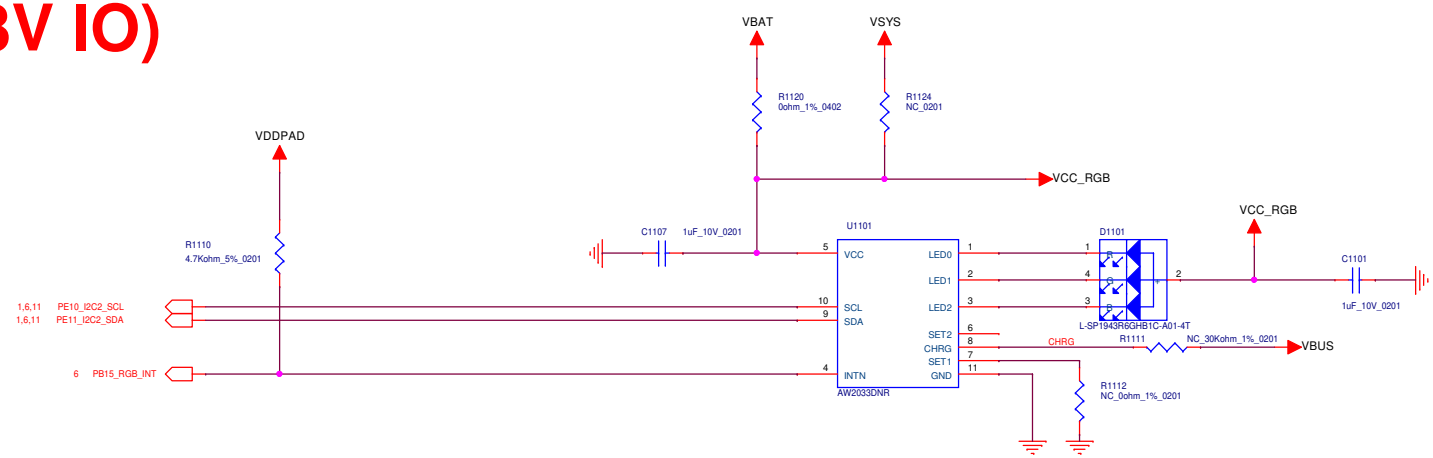

V4.0 Changelist:
1. R1111 / R1112 NC
2. DEL R1122(NC) / R1130(NC) / R1121(NC)

Title	11. Gsensor/RGB LED	
Size B	Document Number <Doc>	Rev V4.0
Date: Monday, February 09, 2026	Sheet 11 of 14	

Copyright © 2026 CrossBar, Inc.

Bluetooth (3.3V IO)

V4.0 Changelist:
1. R1224 NC
2. R1225 0ohm
3. Del R1211
4. VDD_LCM change to VDD_BLDO1
5. R1206 NC
6. DEL TP1206/TP1207/TP1208

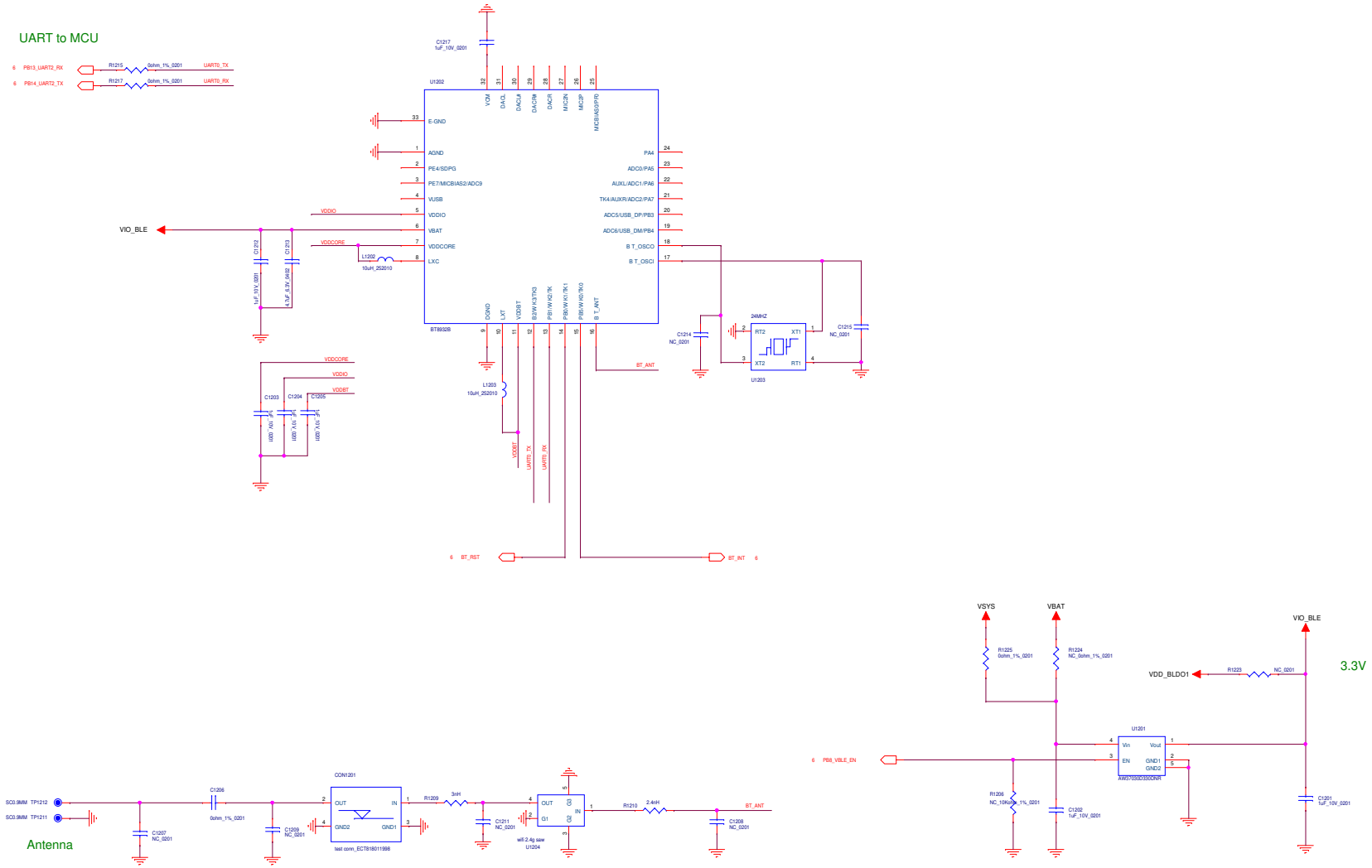

Title	12. Bluetooth
Size C	Document Number <Doc>
Rev	V4.0
Date:	Monday, February 09, 2026
Sheet	12 of 14

Copyright © 2026 CrossBar, Inc.

Wireless Charge(3.3V IO)

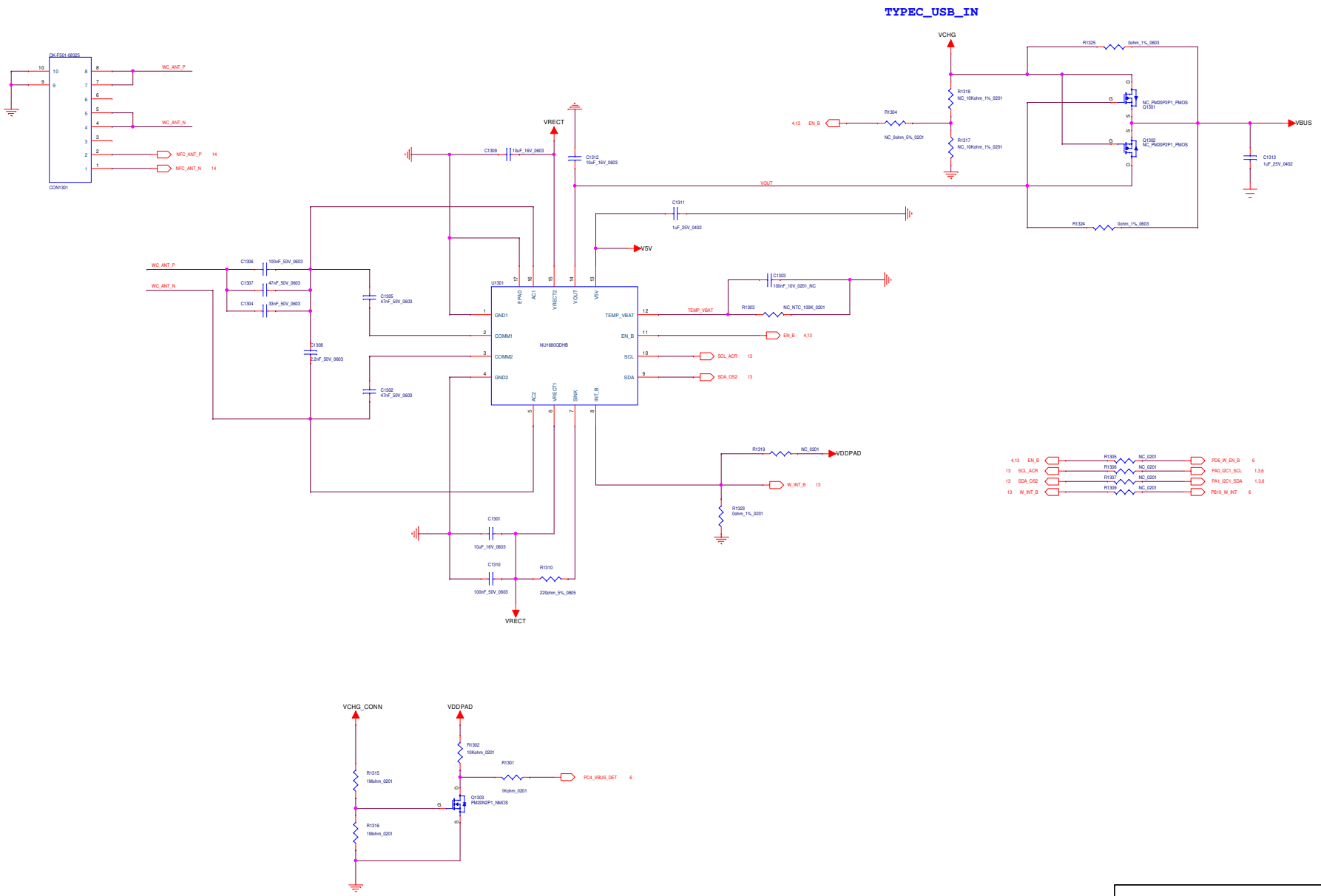

Title	13. Wireless Charger		
Size C	Document Number <Doc>		Rev V4.0
Date: Monday, February 09, 2026		Sheet 13 of 14	

Copyright © 2026 CrossBar, Inc.

NFC(1.8V IO)

I2C1 address : 0x28(7-bit)

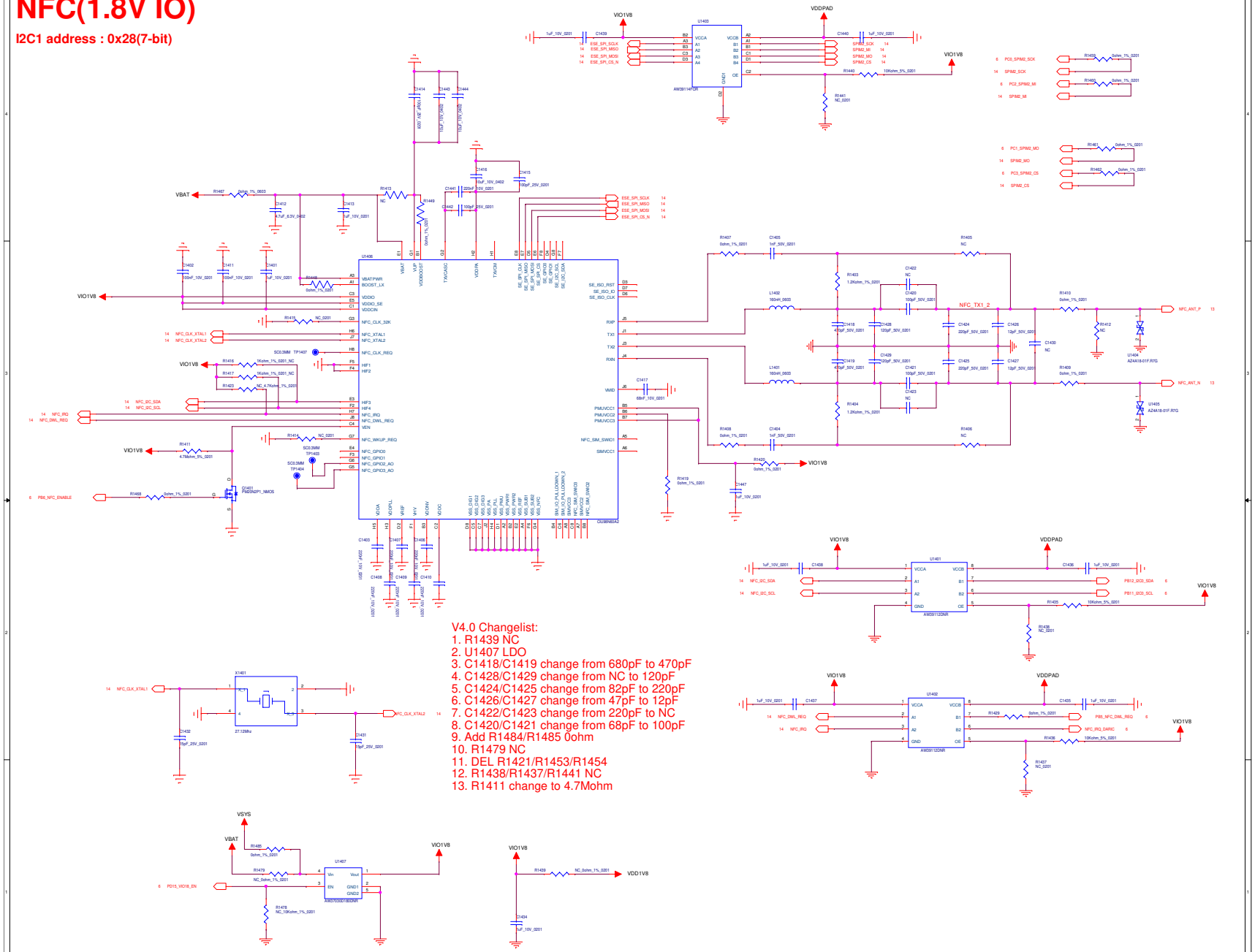

V4.0 Changelist:

1. R1439 NC
2. U1407 LDO
3. C1418/C1419 change from 680pF to 470pF
4. C1428/C1429 change from NC to 120pF
5. C1424/C1425 change from 82pF to 220pF
6. C1426/C1427 change from 47pF to 12pF
7. C1422/C1423 change from 220pF to NC
8. C1420/C1421 change from 68pF to 100pF
9. Add R1484/R1485 0ohm
10. R1479 NC
11. DEL R1421/R1453/R1454
12. R1438/R1437/R1441 NC
13. R1411 change to 4.7Mohm

Title	14. NFC		
Size	Document Number		Rev
Custom	<Doc>		V4.0
Date:	Monday, February 09, 2026	Sheet 14 of 14	

Copyright © 2026 CrossBar, Inc.