Angle Sensor

GMR-Based Angle Sensor

TLE5012B

User's Manual

Rev. 1.2, 2018-02
User's Manual

Sense & Control

Edition 2018-02

Published by
Infineon Technologies AG
81726 Munich, Germany

© 2018 Infineon Technologies AG
All Rights Reserved.

Legal Disclaimer

The information given in this document shall in no event be regarded as a guarantee of conditions or characteristics. With respect to any examples or hints given herein, any typical values stated herein and/or any information regarding the application of the device, Infineon Technologies hereby disclaims any and all warranties and liabilities of any kind, including without limitation, warranties of non-infringement of intellectual property rights of any third party.

Information

For further information on technology, delivery terms and conditions and prices, please contact the nearest Infineon Technologies Office (**www.infineon.com**).

Warnings

Due to technical requirements, components may contain dangerous substances. For information on the types in question, please contact the nearest Infineon Technologies Office.

Infineon Technologies components may be used in life-support devices or systems only with the express written approval of Infineon Technologies, if a failure of such components can reasonably be expected to cause the failure of that life-support device or system or to affect the safety or effectiveness of that device or system. Life support devices or systems are intended to be implanted in the human body or to support and/or maintain and sustain and/or protect human life. If they fail, it is reasonable to assume that the health of the user or other persons may be endangered.

Revision History	
Page or Item	**Subjects (major changes since previous revision)**
Rev. 1.2, 2018-02	
Chapter 5.2.4	Update STAT and RESP in CRC calculation
Chapter 6.1.4	Add explanation when ANG_DIR = 1
Figure 6-1	Update STAT register
Chapter 3	Uptade Chapter 3
Chapter 5.6	Add footnote regarding maximum rotation speed
Chapter 6.2.1	Update S_MAGOL definition

Trademarks of Infineon Technologies AG

AURIX™, C166™, CanPAK™, CIPOS™, CIPURSE™, EconoPACK™, CoolMOS™, CoolSET™, CORECONTROL™, CROSSAVE™, DAVE™, DI-POL™, EasyPIM™, EconoBRIDGE™, EconoDUAL™, EconoPIM™, EconoPACK™, EiceDRIVER™, eupec™, FCOS™, HITFET™, HybridPACK™, I²RF™, ISOFACE™, IsoPACK™, MIPAQ™, ModSTACK™, my-d™, NovalithIC™, OptiMOS™, ORIGA™, POWERCODE™; PRIMARION™, PrimePACK™, PrimeSTACK™, PRO-SIL™, PROFET™, RASIC™, ReverSave™, SatRIC™, SIEGET™, SINDRION™, SIPMOS™, SmartLEWIS™, SOLID FLASH™, TEMPFET™, thinQ!™, TRENCHSTOP™, TriCore™.

Other Trademarks

Advance Design System™ (ADS) of Agilent Technologies, AMBA™, ARM™, MULTI-ICE™, KEIL™, PRIMECELL™, REALVIEW™, THUMB™, µVision™ of ARM Limited, UK. AUTOSAR™ is licensed by AUTOSAR development partnership. Bluetooth™ of Bluetooth SIG Inc. CAT-iq™ of DECT Forum. COLOSSUS™, FirstGPS™ of Trimble Navigation Ltd. EMV™ of EMVCo, LLC (Visa Holdings Inc.). EPCOS™ of Epcos AG. FLEXGO™ of Microsoft Corporation. FlexRay™ is licensed by FlexRay Consortium. HYPERTERMINAL™ of Hilgraeve Incorporated. IEC™ of Commission Electrotechnique Internationale. IrDA™ of Infrared Data Association Corporation. ISO™ of INTERNATIONAL ORGANIZATION FOR STANDARDIZATION. MATLAB™ of MathWorks, Inc. MAXIM™ of Maxim Integrated Products, Inc. MICROTEC™, NUCLEUS™ of Mentor Graphics Corporation. MIPI™ of MIPI Alliance, Inc. MIPS™ of MIPS Technologies, Inc., USA. muRata™ of MURATA MANUFACTURING CO., MICROWAVE OFFICE™ (MWO) of Applied Wave Research Inc., OmniVision™ of OmniVision Technologies, Inc. Openwave™ Openwave Systems Inc. RED HAT™ Red Hat, Inc. RFMD™ RF Micro Devices, Inc. SIRIUS™ of Sirius Satellite Radio Inc. SOLARIS™ of Sun Microsystems, Inc. SPANSION™ of Spansion LLC Ltd. Symbian™ of Symbian Software Limited. TAIYO YUDEN™ of Taiyo Yuden Co. TEAKLITE™ of CEVA, Inc. TEKTRONIX™ of Tektronix Inc. TOKO™ of TOKO KABUSHIKI KAISHA TA. UNIX™ of X/Open Company Limited. VERILOG™, PALLADIUM™ of Cadence Design Systems, Inc. VLYNQ™ of Texas Instruments Incorporated. VXWORKS™, WIND RIVER™ of WIND RIVER SYSTEMS, INC. ZETEX™ of Diodes Zetex Limited.

Last Trademarks Update 2011-11-11

Table of Contents

Table of Contents . . . 4
List of Figures . . . 6
List of Tables . . . 8
1 Product Description . . . 9
1.1 Overview . . . 9
1.2 Features . . . 10
1.3 Application Example . . . 10
2 Functional Description . . . 11
2.1 Block Diagram . . . 11
2.2 Functional Block Description . . . 11
2.2.1 Internal Power Supply . . . 11
2.2.2 Oscillator and PLL . . . 11
2.2.3 SD-ADC . . . 12
2.2.4 Digital Signal Processing Unit . . . 12
2.2.5 Interfaces . . . 13
2.2.6 Safety Features . . . 13
2.3 Sensing Principle . . . 14
2.4 Pin Configuration . . . 16
2.5 Pin Description . . . 16
3 Application Circuits . . . 17
3.1 IIF interface and SSC (IIF in push-pull configuration) . . . 17
3.2 HSM interface and SSC (HSM in push-pull configuration) . . . 17
3.3 HSM interface and SSC (HSM in open-drain configuration) . . . 18
3.4 PWM interface (push-pull configuration) . . . 18
3.5 PWM interface (open-drain configuration) . . . 19
3.6 SPC interface . . . 19
3.7 SSC interface (push-pull configuration) . . . 20
3.8 SSC interface (open-drain configuration) . . . 20
3.9 Sensor supply in bus mode . . . 21
4 Specification . . . 22
4.1 Autocalibration . . . 22
4.1.1 Angle Error adder with Autocalibration enabled . . . 25
4.2 Prediction mode . . . 26
4.3 Calculation of the Junction Temperature . . . 27
4.4 Calculation of the Temperature . . . 27
4.5 Switching to external clock . . . 28
5 Interfaces . . . 29
5.1 Interfaces overview . . . 29
5.2 Synchronous Serial Communication (SSC) Interface . . . 31
5.2.1 SSC Timing Definition . . . 31
5.2.2 SSC Data Transfer . . . 33
5.2.3 TLE5012B in bus mode . . . 36
5.2.4 Cyclic Redundancy Check (CRC) . . . 37
5.2.5 Angle Calculation with X-raw and Y-raw values . . . 43
5.2.5.1 Angle Calculation using pre-calibrated compensation values . . . 43
5.2.5.2 Angle Calculation with end-of-line calibration values . . . 45

5.3 Pulse Width Modulation Interface . . . 46
5.4 Short PWM Code (SPC) . . . 48
5.4.1 Unit Time Setup . . . 50
5.4.2 Master Trigger Pulse Requirements . . . 51
5.4.3 Checksum Nibble Details . . . 52
5.5 Hall Switch Mode (HSM) . . . 55
5.6 Incremental Interface (IIF) . . . 59

6 SSC Registers . . . 64
6.1 Registers Overview . . . 64
6.1.1 Bit Types . . . 67
6.1.2 Communication Examples . . . 68
6.1.3 Signed registers and Two's complement . . . 70
6.1.4 Zero position configuration . . . 71
6.2 Registers Descriptions . . . 73
6.2.1 Register Descriptions . . . 75

7 Pre-Configured Derivates . . . 102
7.1 IIF-type: E1000 . . . 102
7.2 HSM-type: E3005 . . . 102
7.3 PWM-type: E5000 . . . 102
7.4 PWM-type: E5020 . . . 103
7.5 SPC-type: E9000 . . . 103
7.6 Fuse Values . . . 104

List of Figures

Figure 1-1 PG-DSO-8 package . . . 9
Figure 1-2 A usual application for TLE5012B is the electrically commutated motor . . . 10
Figure 2-1 TLE5012B block diagram . . . 11
Figure 2-2 Laser Fuses burning process . . . 12
Figure 2-3 PRO-SIL™ Logo . . . 13
Figure 2-4 Sensitive bridges of the GMR sensor (not to scale) . . . 14
Figure 2-5 Ideal output of the GMR sensor bridges . . . 15
Figure 2-6 Pin configuration (top view) . . . 16
Figure 3-1 Application circuit for TLE5012B with IIF interface and SSC . . . 17
Figure 3-2 Application circuit for TLE5012B with HSM interface (push-pull configuration) and SSC . . . 17
Figure 3-3 Application circuit for TLE5012B with HSM interface (open-drain configuration) and SSC . . . 18
Figure 3-4 Application circuit for TLE5012B with PWM (push-pull configuration) interface . . . 18
Figure 3-5 Application circuit for TLE5012B with PWM (open-drain configuration) interface . . . 19
Figure 3-6 Application circuit for TLE5012B with SPC interface . . . 19
Figure 3-7 SSC interface with push-pull configuration (high-speed application) . . . 20
Figure 3-8 SSC interface with open-drain configuration (bus systems) . . . 20
Figure 3-9 Sensors' supply in bus mode . . . 21
Figure 4-1 Parameter correction with autocalibration mode 1 . . . 22
Figure 4-2 Parameter correction with autocalibration mode 2 . . . 22
Figure 4-3 Parameter correction with autocalibration mode 3 . . . 23
Figure 4-4 Cases where an angle error adder has to be included if autocalibration is enabled . . . 25
Figure 4-5 Delay of sensor output . . . 26
Figure 4-6 Revolution counter with prediction mode disabled/enabled . . . 26
Figure 5-1 SSC timing . . . 31
Figure 5-2 SSC data transfer (data-read example) . . . 33
Figure 5-3 SSC data transfer (data-write example) . . . 33
Figure 5-4 SSC bit ordering (read example) . . . 35
Figure 5-5 Update of update registers . . . 35
Figure 5-6 Example of four slaves connected to a bus with one master with SSC interface . . . 36
Figure 5-7 Fast CRC polynomial division circuit . . . 37
Figure 5-8 TLE5012B's CRC generator polynomial for the SSC interface . . . 37
Figure 5-9 CRC generation example with SSC interface . . . 38
Figure 5-10 Flow-Chart of Angle Calculation from the X-raw and Y-raw values . . . 45
Figure 5-11 Typical example of a PWM signal . . . 46
Figure 5-12 Example of four slaves connected to a bus with one master with SPC interface . . . 48
Figure 5-13 SPC frame example . . . 49
Figure 5-14 SPC pause timing diagram . . . 49
Figure 5-15 SPC configuration in open drain mode . . . 49
Figure 5-16 SPC Master pulse timing . . . 51
Figure 5-17 TLE5012B's CRC generator polynomial for the SPC interface . . . 52
Figure 5-18 CRC generation example with SPC interface . . . 52
Figure 5-19 Hall Switch Mode . . . 55
Figure 5-20 HS hysteresis . . . 58
Figure 5-21 Incremental interface with A/B mode . . . 59
Figure 5-22 Incremental interface with Step/Direction mode . . . 59
Figure 5-23 Increcremental Interface startup pulses and first step movements at different speeds . . . 60
Figure 5-24 Increcremental Interface startup pulses frequency . . . 61
Figure 5-25 IIF Index pulse in A/B Mode . . . 61
Figure 5-26 IIF Index pulse in Step/Direction Mode . . . 62

Figure 5-27 Phase A/B output during a rotation direction change due to the hysteresis threshold 62
Figure 6-1 Bitmap Part 1 64
Figure 6-2 Bitmap Part 2 65
Figure 6-3 Colour legend for the Bitmap 65
Figure 6-4 SSC command to read angle value 68
Figure 6-5 SSC command to read angle speed and angle revolution 68
Figure 6-6 SSC command to change Interface Mode2 register. 68
Figure 6-7 SSC data transfer sequence to change a configuration parameter 69
Figure 6-8 Example of a SSC data transfer sequence to change a configuration parameter 69
Figure 6-9 Flow-Chart of ANG_BASE calibration procedure 71
Figure 6-10 SSC data transfer to configure the zero position 72
Figure 6-11 Zero position configuration in different domains 72
Figure 6-12 Timing of angle calculation in SPC. Trigger Nibble low time corresponds to slave number. 96
Figure 7-1 Derivate-specific fuse settings 104

List of Tables

Table 2-1 Pin Description 16
Table 4-1 Initialization via SSC / SPI to change ANG_DIR 24
Table 4-2 Additional angle error examples 25
Table 5-1 Main interface characteristics 30
Table 5-2 SSC push-pull timing specification 31
Table 5-3 SSC open-drain timing specification 32
Table 5-4 Structure of the Command Word 33
Table 5-5 Structure of the Safety Word 34
Table 5-6 Bit Types 34
Table 5-7 PWM interface 47
Table 5-8 Frame configuration 50
Table 5-9 Structure of status nibble 50
Table 5-10 Predivider setting 50
Table 5-11 Master pulse parameters 51
Table 5-12 Hall Switch Mode 55
Table 5-13 Incremental Interface 63
Table 6-1 Bit Types 67
Table 6-2 Register Overview 73

1 Product Description

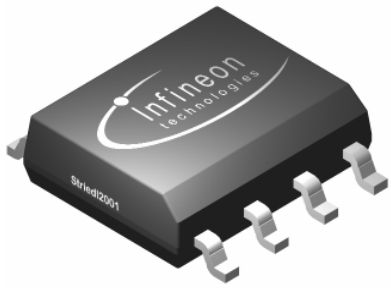

Figure 1-1 PG-DSO-8 package

1.1 Overview

The TLE5012B is a 360° angle sensor that detects the orientation of a magnetic field. This is achieved by measuring sine and cosine angle components with monolithically integrated Giant Magneto Resistance (iGMR) elements. These raw signals (sine and cosine) are digitally processed internally to calculate the angle orientation of the magnetic field (magnet).

The TLE5012B is a pre-calibrated sensor. The calibration parameters are stored in laser fuses. At start-up the values of the fuses are written into flip-flops, where these values can be changed to application-specific parameters. The precision of the angle measurement, over a wide temperature range and a long lifetime, can be improved by enabling an optional internal autocalibration algorithm.

Data communications are accomplished with a bi-directional Synchronous Serial Communication (SSC) that is SPI-compatible. The sensor configuration is stored in registers, which are accessible by the SSC interface.

Additionally four other interfaces are available with the TLE5012B: Pulse-Width-Modulation (PWM) Protocol, Short-PWM-Code (SPC) Protocol, Hall Switch Mode (HSM) and Incremental Interface (IIF). These interfaces can be used in parallel with SSC or alone. Pre-configured sensor derivates with different interface settings are also available. See the derivate ordering codes in the **TLE5012B Data Sheet**. A description of the derivates can also be seen in **Chapter 7**.

Online diagnostic functions are provided to ensure reliable operation.

1.2 Features

- **G**iant **M**agneto **R**esistance (GMR)-based principle
- Integrated magnetic field sensing for angle measurement
- 360° angle measurement with revolution counter and angle speed measurement
- Two separate highly accurate single bit SD-ADC
- 15 bit representation of absolute angle value on the output (resolution of 0.01°)
- 16 bit representation of sine / cosine values on the interface
- Max. 1.0° angle error over lifetime and temperature-range with activated auto-calibration
- Bi-directional SSC Interface typ. 8Mbit/s
- Supports Safety Integrity Level (SIL) with diagnostic functions and status information
- Interfaces: SSC, PWM, Incremental Interface (IIF), Hall Switch Mode (HSM), Short PWM Code (SPC, based on SENT protocol defined in SAE J2716)
- Output pins can be configured (programmed or pre-configured) as push-pull or open-drain
- Bus mode operation of multiple sensors on one line is possible with SSC or SPC interface in open-drain configuration
- 0.25 µm CMOS technology
- Automotive qualified: -40°C to 150°C (junction temperature)
- ESD > 4kV (HBM)
- RoHS compliant (Pb-free package)
- Halogen-free

1.3 Application Example

The TLE5012B GMR-based angle sensor is designed for angular position sensing in automotive applications such as:

- Electrically commutated motor (e.g. Electric Power Steering (EPS), Brushless DC electric motors (BLDC))
- Rotary switches
- Steering angle measurements
- General angular sensing

The TLE5012B is also used in various non-automotive applications.

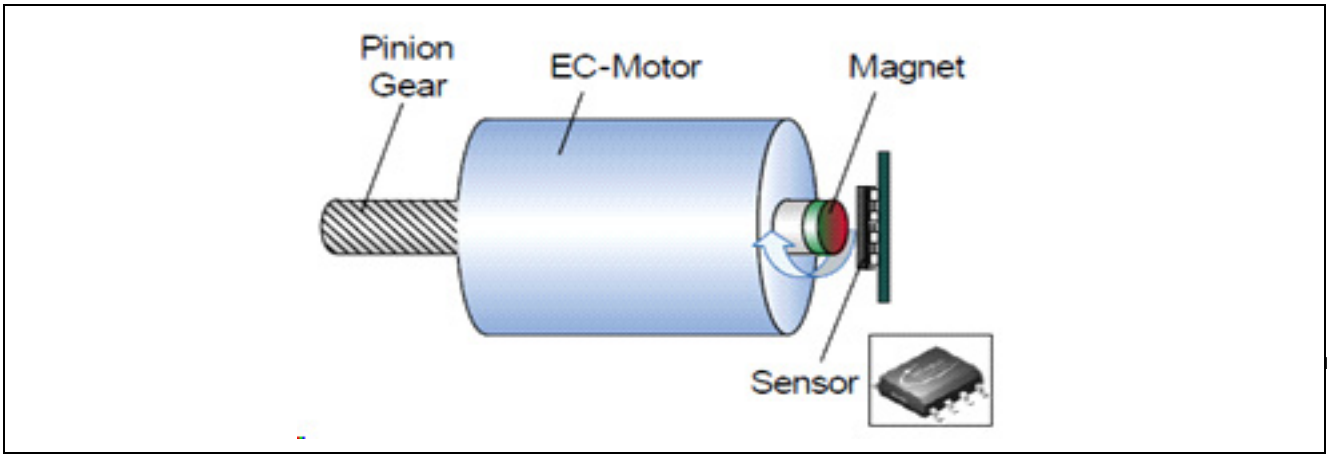

Figure 1-2 A usual application for TLE5012B is the electrically commutated motor

2 Functional Description

2.1 Block Diagram

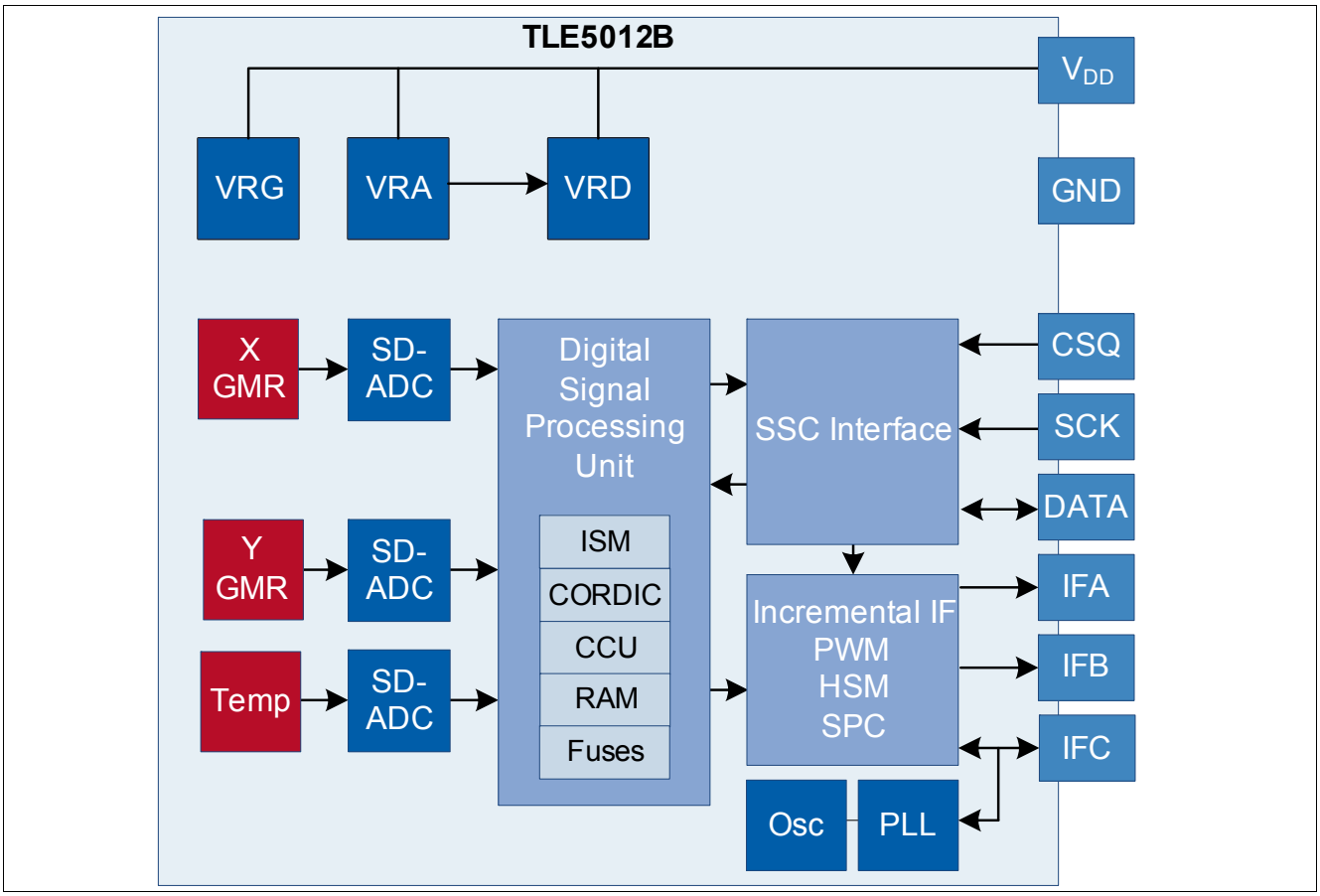

Figure 2-1 TLE5012B block diagram

2.2 Functional Block Description

2.2.1 Internal Power Supply

The internal stages of the TLE5012B are supplied with several voltage regulators:

- GMR Voltage Regulator, VRG
- Analog Voltage Regulator, VRA
- Digital Voltage Regulator, VRD (derived from VRA)

These regulators are directly connected to the supply voltage V_{DD}.

2.2.2 Oscillator and PLL

The digital clock of the TLE5012B is provided by the Phase-Locked Loop (PLL), which is by default fed by an internal oscillator. In order to synchronize the TLE5012B with other ICs in a system, the TLE5012B can be

configured via SSC interface to use an external clock signal supplied on the IFC pin as the PLL source, instead of the internal clock. External clock mode is only available in the PWM or SPC interface configurations.

2.2.3 SD-ADC

The **S**igma-**D**elta **A**nalog-**D**igital-**C**onverters (**SD-ADC**) transform the analog GMR voltages and temperature voltage into the digital domain.

2.2.4 Digital Signal Processing Unit

The Digital Signal Processing Unit (DSPU) contains the:

- **I**ntelligent **S**tate **M**achine (**ISM**), which does error compensation of offset, offset temperature drift, amplitude synchronicity and orthogonality of the raw signals from the GMR bridges, and performs additional features such as auto-calibration, prediction and angle speed calculation
- **CO**ordinate **R**otation **DI**gital **C**omputer (**CORDIC**), which contains the trigonometric function for angle calculation
- **C**apture **C**ompare **U**nit (**CCU**), which is used to generate the PWM and SPC signals
- **R**andom **A**ccess **M**emory (**RAM**), which contains the configuration registers
- Laser Fuses, which contain the calibration parameters for the error-compensation and the IC default configuration, which is loaded into the RAM at startup

Laser fuses configuration

The laser fuse settings are derivate specific. During production, each and every TLE5012B chip is specifically configured according to a derivate interface (PWM, SPC, HSM or IIF) and to its specific calibration values (e.g. offset, amplitude synchronicity, orthogonality). These default values are set by laser fuses, where they remain stored permanently. At power-on the values stored in the fuses are loaded into flip-flops (placed in the RAM).

Via the SSC interface, these derivate specific configuration values can be overwritten in the RAM. This allows some programmability such as change of interface (using a IIF derivate as a PWM derivate for example) or to correct the calibration values (if running the autocalibration mode for example). It is highly recommended to configure the sensor with customized settings right after a Hardware reset (within the first 120µs, prior to start of the Built-In Self-Test). If this interval is not sufficient, it is also possible to configure the sensor after the power-on time. To ensure a correct configuration after power-on time, see recommendations on **Chapter 6**. When powered off or reset, the overwritten values will be lost and the default values stored in the fuses will be reloaded into the RAM at the next power up.

The **Figure 2-2** shows how the fuse burning process works. In the original state all fuses are connected to ground (GND). Once the calibration and derivate specific values are calculated, the information is burned into the fuses, so that some remain connected to GND (“low” or logical “0”) and some are now pulled up by a resistor (“high” or logical “1”). When powering the sensor, the RAM is initialized with the values from the fuses.

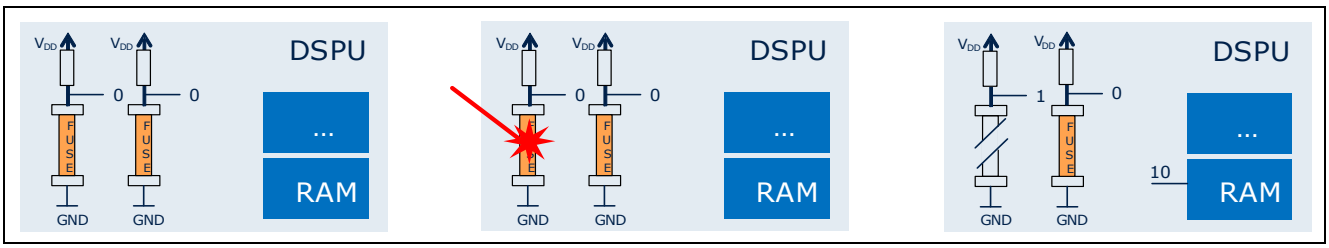

Figure 2-2 Laser Fuses burning process

2.2.5 Interfaces

Bi-directional communication with the TLE5012B is enabled by a three-wire SSC interface. In parallel to the SSC interface, one secondary interface can be selected, which is available on the IFA, IFB, IFC pins:

- PWM
- Incremental Interface
- Hall Switch Mode
- Short PWM Code

By using pre-configured derivates (see **Chapter 7**), the TLE5012B can also be operated with the secondary interface only, without SSC communication.

2.2.6 Safety Features

The TLE5012B offers a multiplicity of safety features to support the Safety Integrity Level (SIL). Infineon's sensors that are intended for this purpose are identified by the following logo:

Figure 2-3 PRO-SIL™ Logo

Disclaimer

PRO-SIL™ is a Registered Trademark of Infineon Technologies AG.

The PRO-SIL™ Trademark designates Infineon products which contain SIL Supporting Features.

SIL Supporting Features are intended to support the overall System Design to reach the desired SIL (according to IEC61508) or A-SIL (according to ISO26262) level for the Safety System with high efficiency.

SIL respectively A-SIL certification for such a System has to be reached on system level by the System Responsible at an accredited Certification Authority.

SIL stands for Safety Integrity Level (according to IEC 61508)

A-SIL stands for Automotive-Safety Integrity Level (according to ISO 26262)

Safety features are:

- Test vectors switchable to ADC input (activated via SSC interface)
- Inversion or combination of filter input streams (activated via SSC interface)
- Data transmission check via 8-bit **C**yclic **R**edundancy **C**heck (**CRC**) for SSC communcation and 4-bit CRC nibble for SPC interface
- Built-in Self-test (BIST) routines for ISM, CORDIC, CCU, ADCs performed at startup
- Two independent active interfaces possible
- Overvoltage and undervoltage detection

2.3 Sensing Principle

The Giant Magneto Resistance (GMR) sensor is implemented using vertical integration. This means that the GMR-sensitive areas are integrated above the logic part of the TLE5012B device. These GMR elements change their resistance depending on the direction of the magnetic field.

Four individual GMR elements are connected to one Wheatstone sensor bridge for each of the two components of the applied magnetic field:

- X component, V_x (cosine) and the
- Y component, V_y (sine)

With this full-bridge structure the maximum GMR signal is available and temperature effects cancel out each other.

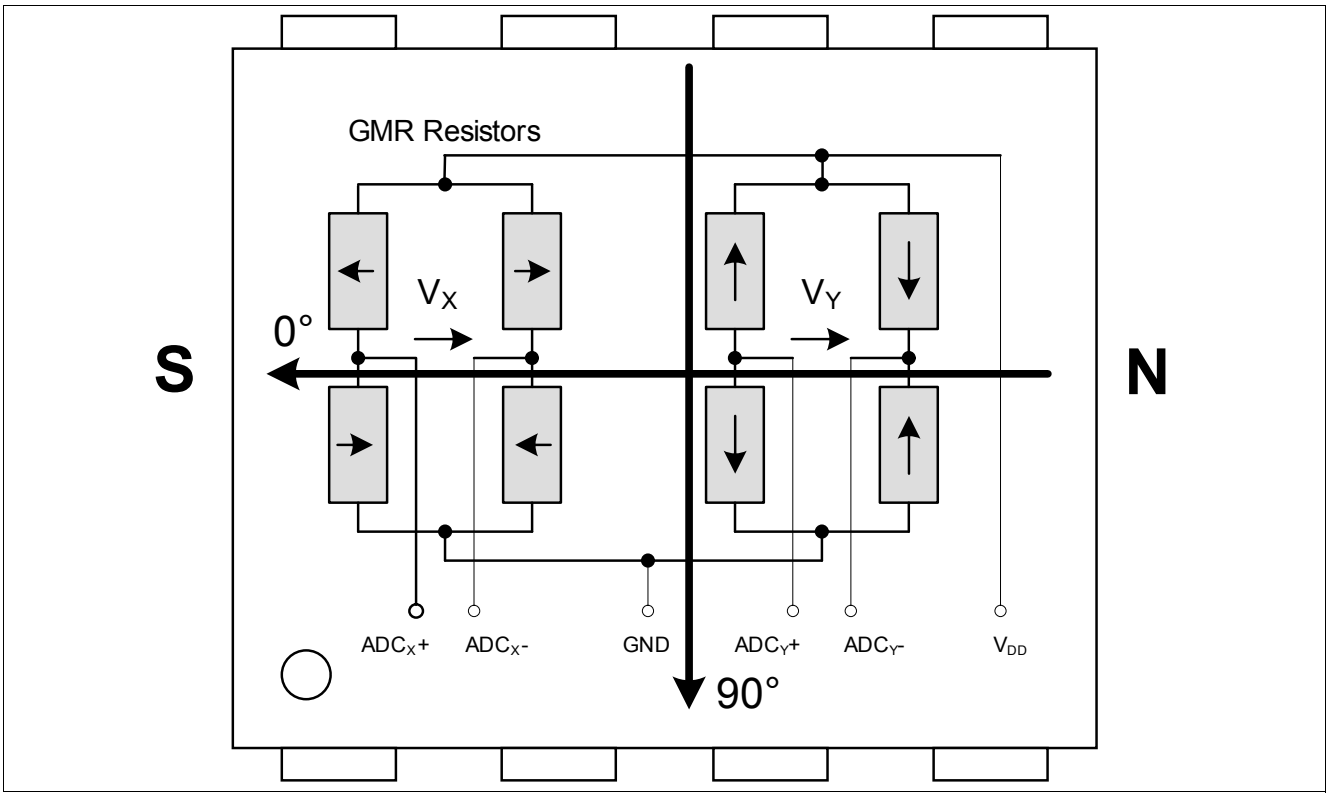

Figure 2-4 Sensitive bridges of the GMR sensor (not to scale)

Attention: Due to the rotational placement inaccuracy of the sensor IC in the package, the sensors 0° position may deviate by up to 3° from the package edge direction indicated in Figure 2-4.

In **Figure 2-4**, the arrows in the resistors represent the magnetic direction which is fixed in the Reference Layer. On top of the Reference Layer, and separated by a non magnetic layer, there is a Free Layer. When applying an external magnetic field the Free Layer moves in the same direction as the external magnetic field, while the Reference Layer remains fix. The resistance of the GMR elements depends on the magnetic direction difference between the Reference Layer and the Free Layer.

When the external magnetic field is parallel to the direction of the Reference Layer, the resistance is minimal (Reference Layer and Free Layer are parallel). When the external magnetic field and the Reference Layer are anti-parallel (Reference Layer and Free Layer are anti-parallel), resistance is maximal.

The output signal of each bridge is only unambiguous over 180° between two maxima. Therefore two bridges are oriented orthogonally to each other to measure 360°.

With the trigonometric function ARCTAN2, the true 360° angle value is calculated out of the raw X and Y signals from the sensor bridges.

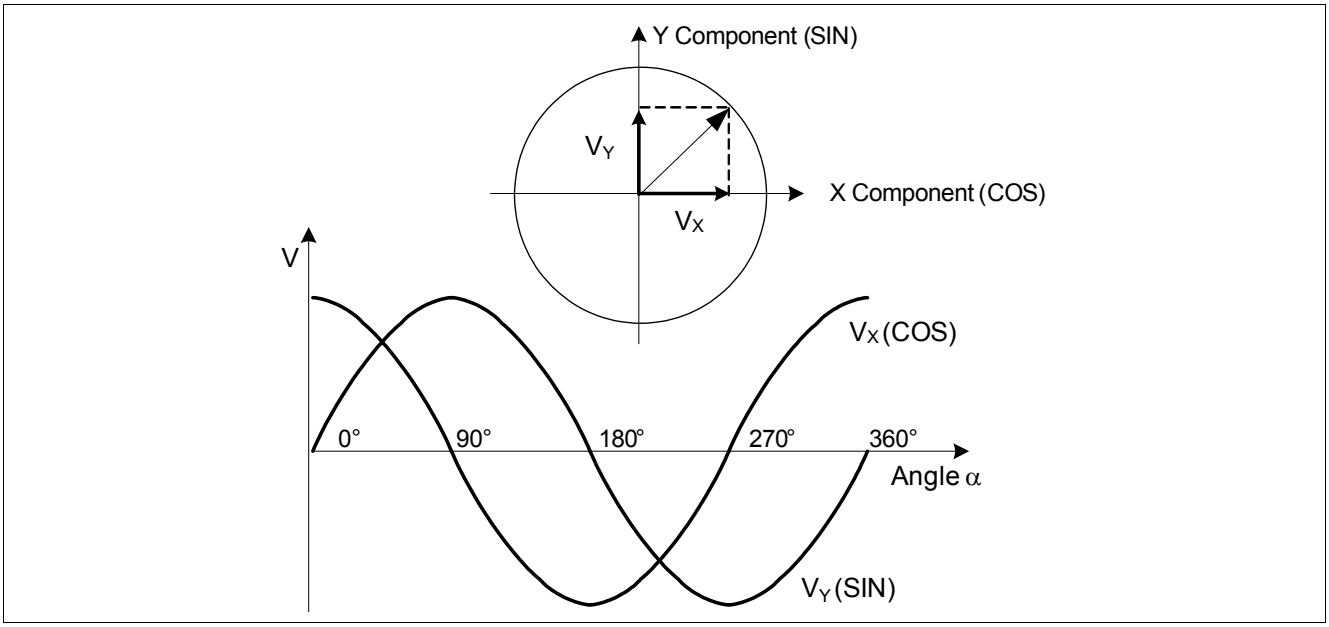

Figure 2-5 Ideal output of the GMR sensor bridges

2.4 Pin Configuration

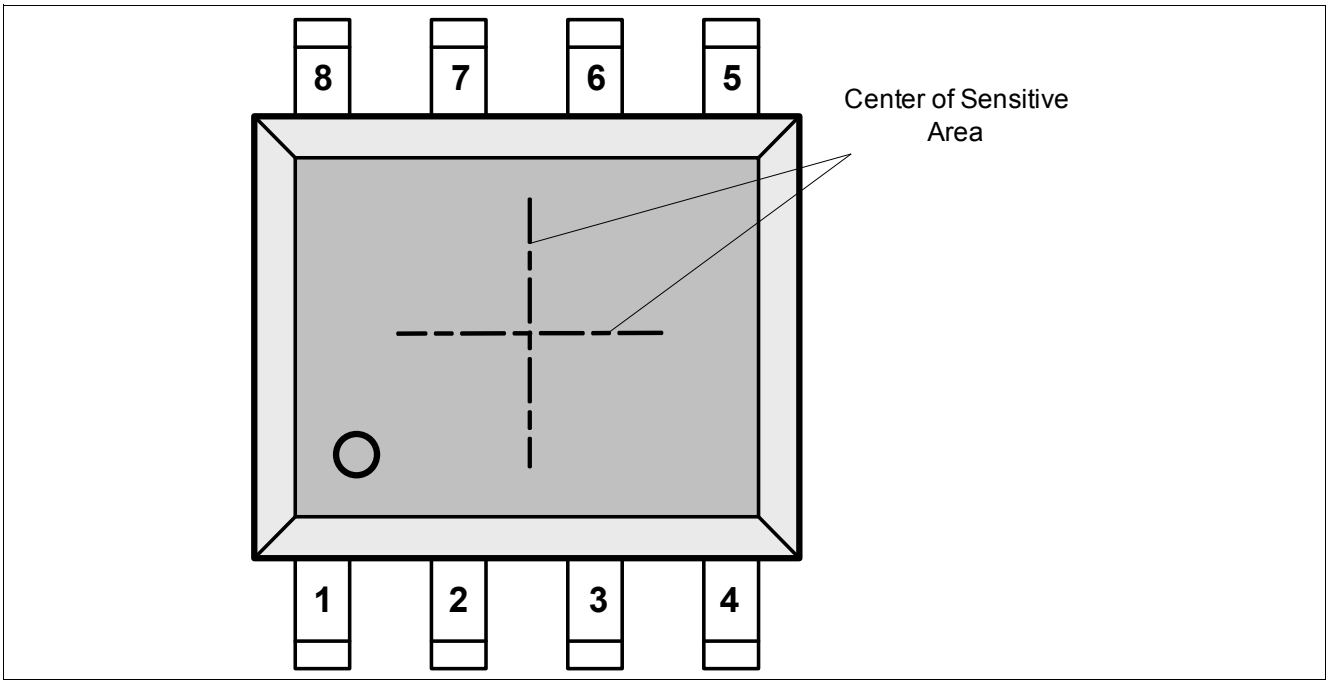

Figure 2-6 Pin configuration (top view)

2.5 Pin Description

Table 2-1 Pin Description

Pin No.	Symbol	In/Out	Function
1	IFC (CLK / IIF_IDX / HS3)	I/O	Interface C: External Clock[1)] / IIF Index / Hall Switch Signal 3
2	SCK	I	SSC Clock
3	CSQ	I	SSC Chip Select
4	DATA	I/O	SSC Data
5	IFA (IIF_A / HS1 / PWM / SPC)	I/O	Interface A: IIF Phase A / Hall Switch Signal 1 / PWM / SPC output (input for SPC trigger only)
6	V_{DD}	-	Supply Voltage
7	GND	-	Ground
8	IFB (IIF_B / HS2)	O	Interface B: IIF Phase B / Hall Switch Signal 2

1) External clock feature is not available in IIF or HSM interface mode

3 Application Circuits

The application circuits in this chapter show the various communication possibilities of the TLE5012B. The pin output mode configuration is device-specific and it can be either push-pull or open-drain. The bit IFAB_OD (register IFAB, 0DH) indicates the output mode for the IFA, IFB and IFC pins. The SSC pins are by default push-pull (bit SSC_OD, register MOD_3, 09H). Every application circuits below are using otherwise specified SSC with push-pull configuration and the internal clock.

3.1 IIF interface and SSC (IIF in push-pull configuration)

Figure 3-1 shows a block diagram of a TLE5012B with Incremental Interface (IIF) and SSC interface. The derivate TLE5012B - E1000 is by default configured with push-pull IFA (IIF_A), IFB (IIF_ B) and IFC (IIF_IDX) pins. When the output pins are configurated as open-drain, three pull-up resistors should be added (e.g. 2k2Ω) between the data lines and VDD.

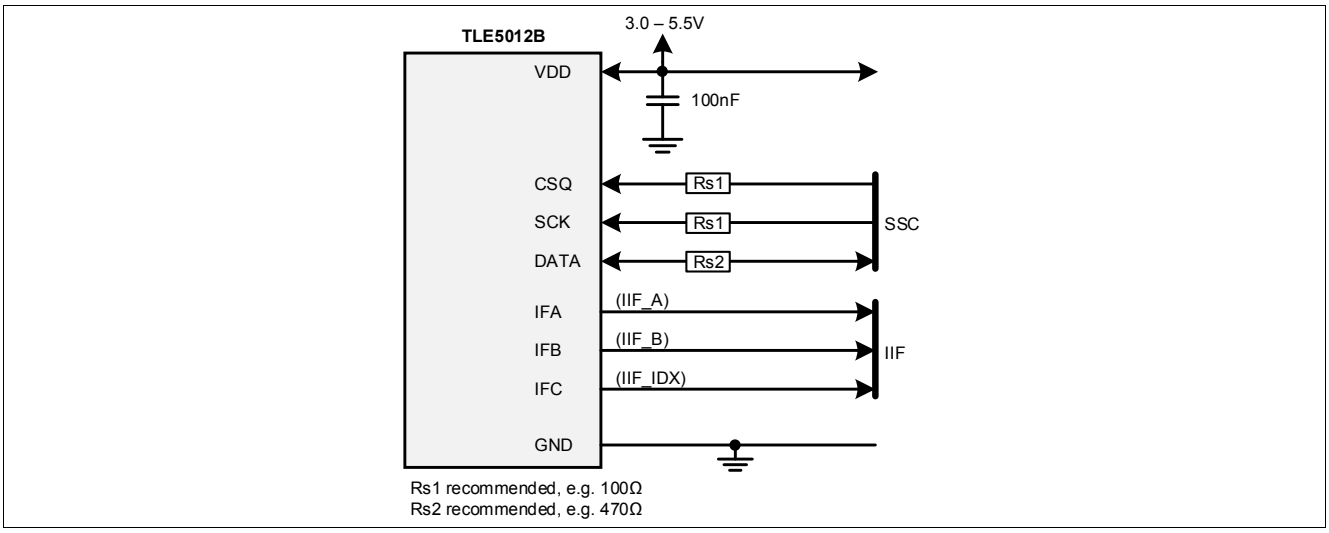

Figure 3-1 Application circuit for TLE5012B with IIF interface and SSC

3.2 HSM interface and SSC (HSM in push-pull configuration)

Figure 3-2 shows a block diagram of the TLE5012B with Hall Switch Mode (HSM) and SSC interface. The derivate TLE5012B - E3005 is by default configurated with push-pull IFA (HS1), IFB (HS2) and IFC (HS3) pins.

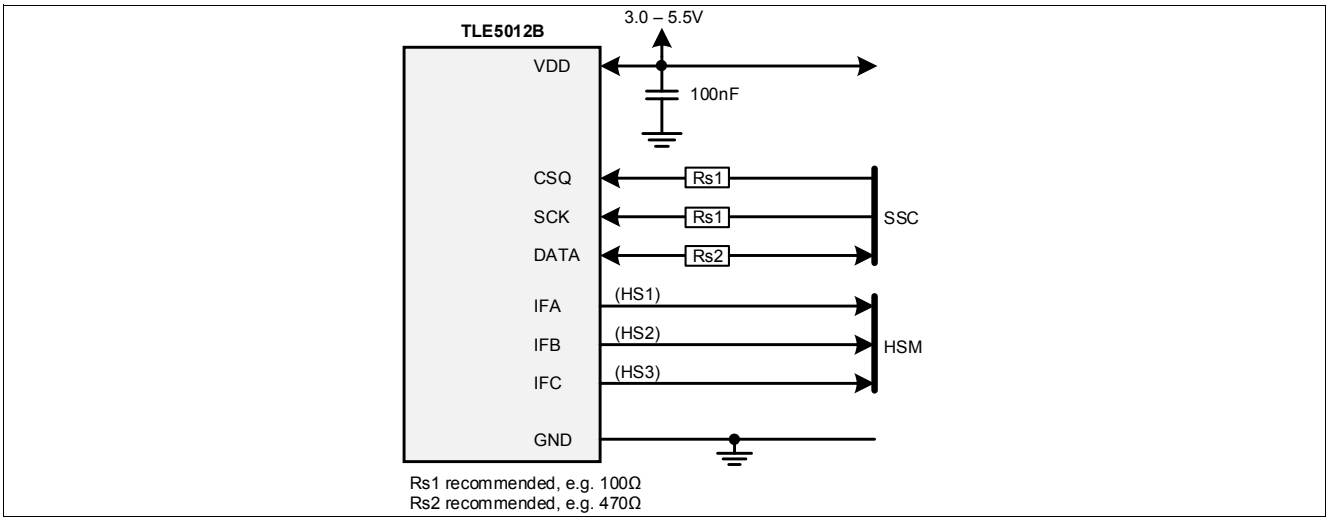

Figure 3-2 Application circuit for TLE5012B with HSM interface (push-pull configuration) and SSC

3.3 HSM interface and SSC (HSM in open-drain configuration)

As shown in **Figure 3-3** when IFA, IFB and IFC are configurated via the SSC interface as open drain pins, three pull-up resistors (Rpu) should be added on the output lines.

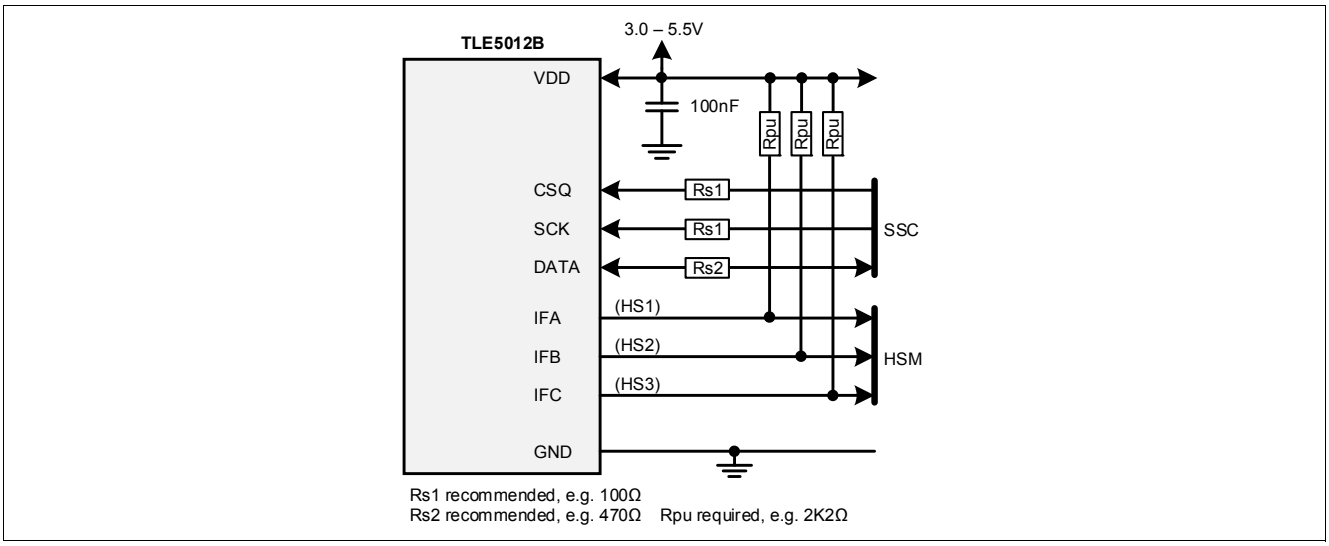

Figure 3-3 Application circuit for TLE5012B with HSM interface (open-drain configuration) and SSC

3.4 PWM interface (push-pull configuration)

The TLE5012B can be configured with PWM only (**Figure 3-4**). The derivate TLE5012B - E5000 is by default configurated with push-pull configuration for IFA (PWM) pin. Internal pull-up resistors are always available for DATA and CSQ pins (see Datasheet). It is recommended to connect CSQ pin to V_{DD} to provide a high level and avoid unintentional activation of the SSC interface. DATA pin should be left open. The figure below shows a typical implementation of the TLE5012B - E5000.

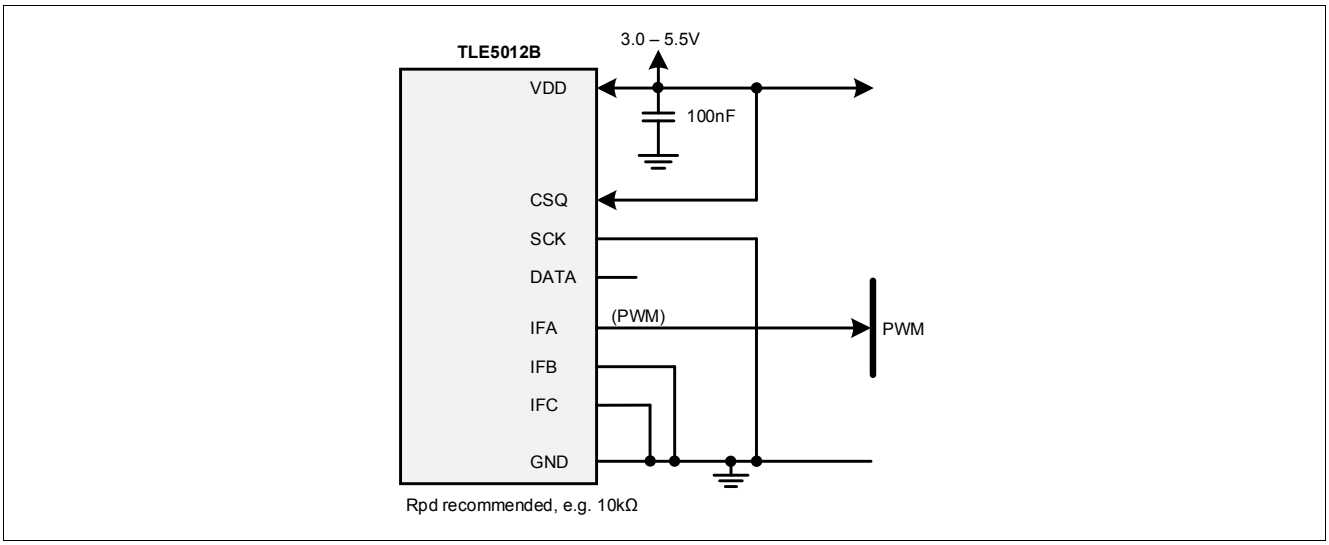

Figure 3-4 Application circuit for TLE5012B with PWM (push-pull configuration) interface

3.5 PWM interface (open-drain configuration)

The TLE5012B - E5020 is also a PWM derivate but with open drain for IFA (PWM) pin. A pull-up resistor (e.g. 2.2kΩ) should be added between the IFA line and VDD, as shown in **Figure 3-5**.
Internal pull-up resistors are always available for DATA and CSQ pins (see Datasheet). It is recommended to connect CSQ pin to V_{DD} to provide a strong level and avoid unintentional activation of the SSC interface. DATA pin should be left open. The figure below shows a typical implementation of the TLE5012B - E5020.

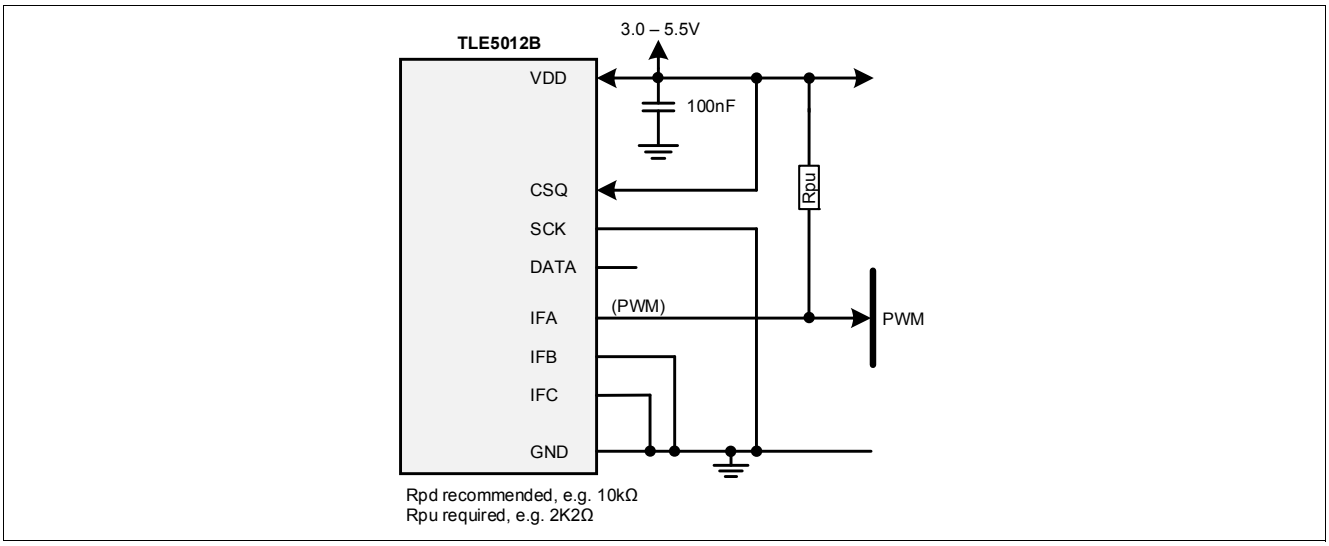

Figure 3-5 Application circuit for TLE5012B with PWM (open-drain configuration) interface

3.6 SPC interface

The TLE5012B can be configured with SPC only (**Figure 3-6**). This is only possible with the TLE5012B - E9000 derivate, which is by default configurated with an open-drain IFA (SPC) pin.
In **Figure 3-6** the IFC (S_NR[1]) and SCK (S_NR[0]) pins are set to ground to generate the slave number (S_NR) 0_D (or 00_B). In case of SCK (S_NR[0]) needs to be set to VDD to generate another slave address, CSQ pin should be set to ground instead. Internal pull-up resistors are always available for DATA and CSQ pins (see Datasheet). DATA pin should be left open. Since SCK and CSQ pins should have opposite level, it is not recommended to use the SSC interface in parallel.

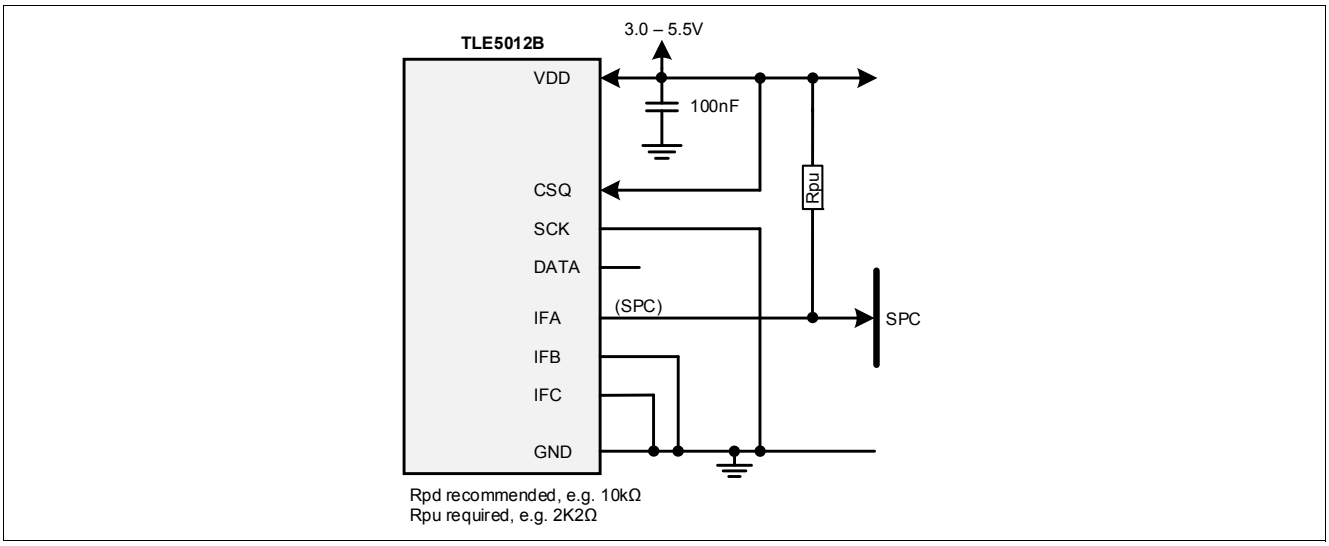

Figure 3-6 Application circuit for TLE5012B with SPC interface

3.7 SSC interface (push-pull configuration)

In **Figure 3-1**, **Figure 3-2** and **Figure 3-3** the SSC interface has the default push-pull configuration (see details in **Figure 3-7**). A series resistor on the DATA line is recommended to limit the current in erroneous cases (e.g. the sensor pushes high and the microcontroller pulls low at the same time or vice versa). Resistors on SCK and CSQ lines are recommended in case of disturbances or noise.

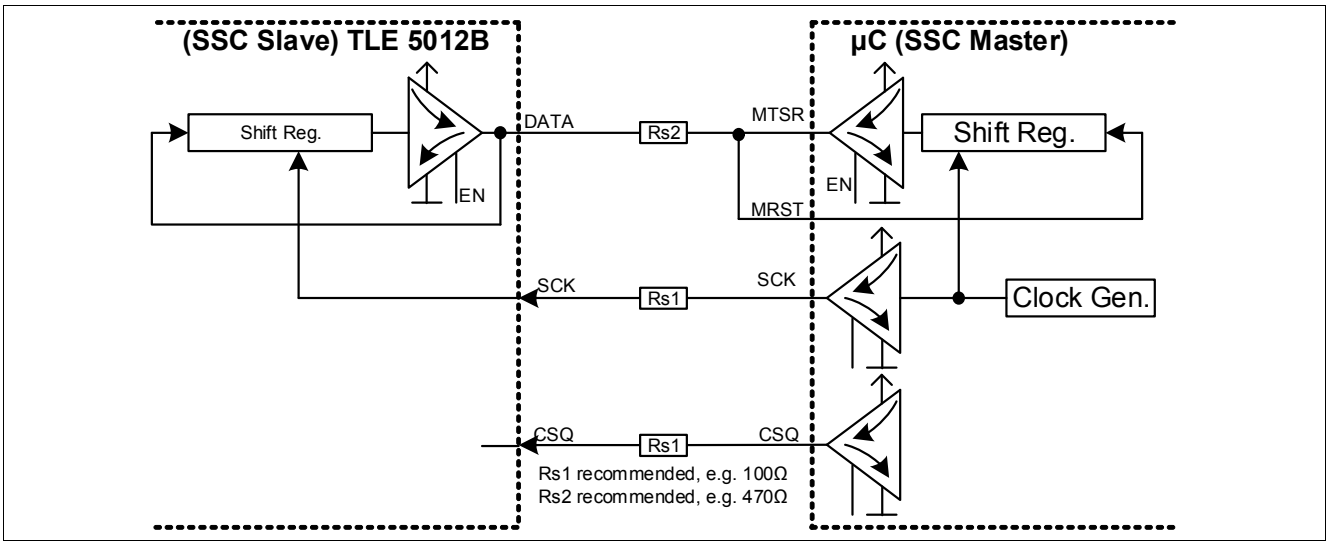

Figure 3-7 SSC interface with push-pull configuration (high-speed application)

3.8 SSC interface (open-drain configuration)

It is possible to use an open-drain configuration for the DATA line. This setup can be used to communicate with a microcontroller in a bus system, together with other SSC slaves (e.g. two TLE5012B devices for redundancy reasons). This mode can be activated using the bit SSC_OD.

Even though, push-pull configuration in a bus system is also possible since the addressing of the sensor is perfomed with CSQ pin.

The open-drain configuration can be seen in **Figure 3-8**. Series resistors on the DATA line are recommended to limit the current in erroneous cases. Resistors on SCK and CSQ lines are recommended in case of disturbances or noise A pull-up resistor of typ. 1 kΩ is required on the DATA line.

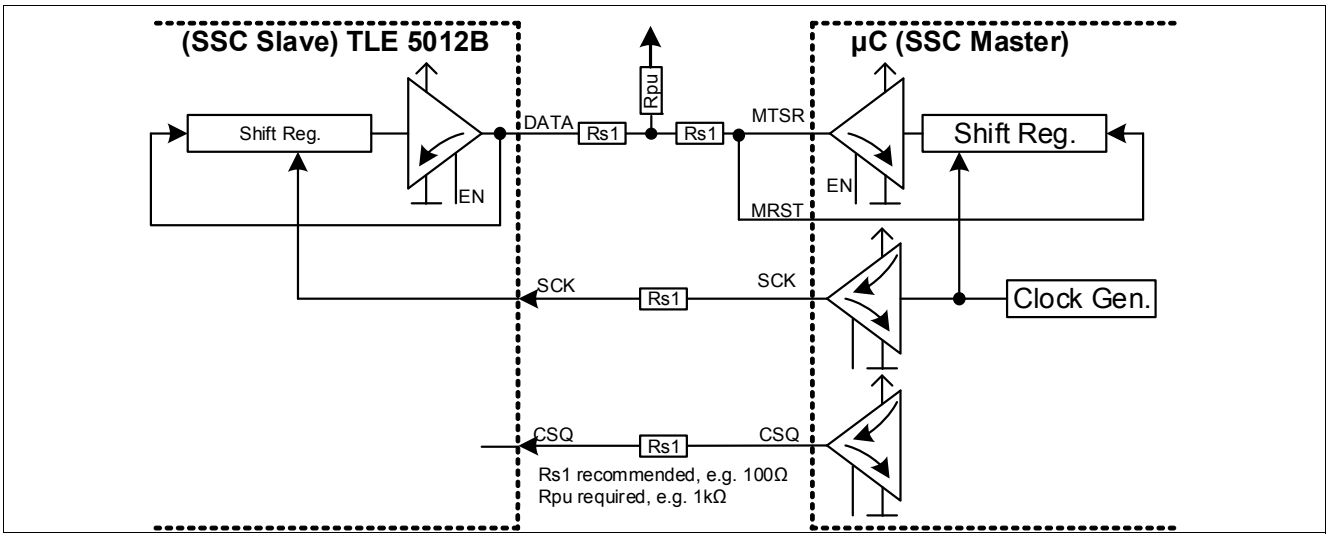

Figure 3-8 SSC interface with open-drain configuration (bus systems)

3.9 Sensor supply in bus mode

When using two or more devices in a bus configuration (SSC or SPC interface). It is recommended to use the same supply for every sensors connected to the bus. In case of a power loss the unpowered device is sinking current through the OUT pin. Depending on the external circuitry the additional current flow might disturb the bus behavior.

The figure below (**Figure 3-9**) shows a typical implementation of a bus mode using SPC interface. External components such as EMC filter or additional series resistors are not represented for clarity purpose. Only the pull-up resistor Rpu is shown.

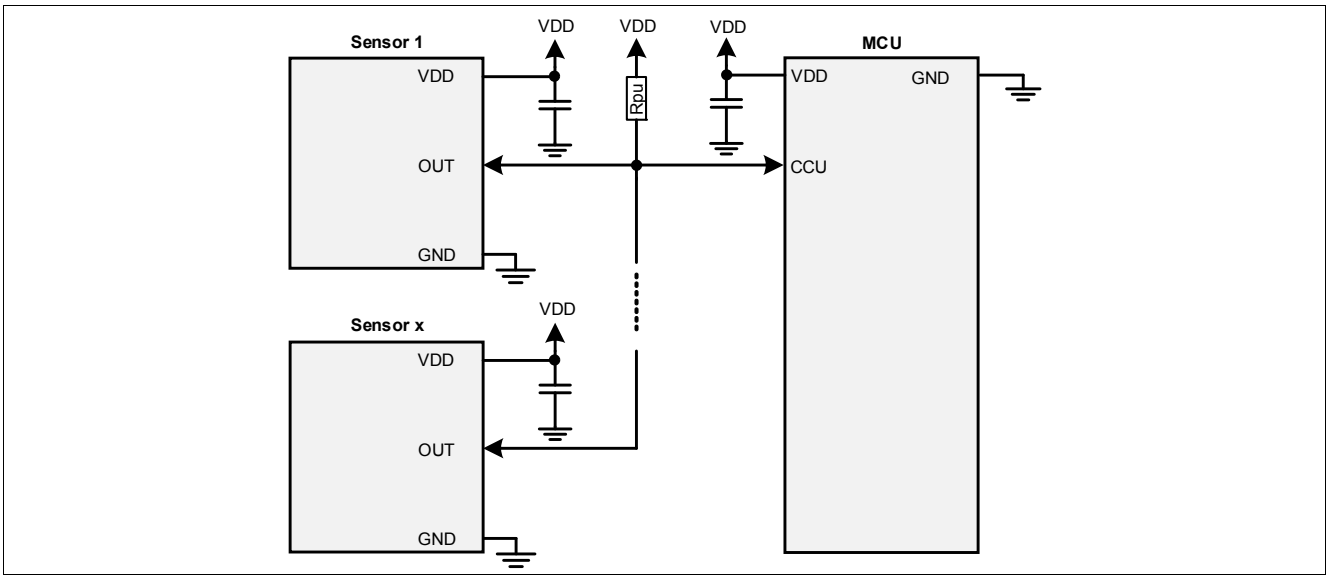

Figure 3-9 Sensors' supply in bus mode

4 Specification

4.1 Autocalibration

Autocalibration enables online parameter calculation, and therefore reduces angle error due to temperature and lifetime drifts.

The TLE5012B is a pre-calibrated sensor; at start-up the parameters stored in the laser fuses are loaded into flip-flops. During operation, the TLE5012B needs 1.5 revolutions to generate new autocalibration parameters. The parameters are updated with new autocalibration parameters according to the mode selected via the AUTOCAL bits (Mode 2 register). The parameters are updated in a smooth way to avoid an angle jump on the output; only one Least-Significant Bit (LSB) will be changed within the chosen range or time. Once the parameters are updated, a new autocalibration parameter generation starts, as autocalibration is done continuously.

AUTOCAL Modes:

- 00: No autocalibration
- 01: Autocalibration Mode 1. Parameters are updated by one LSB at every update time t_{upd} (dependent on FIR_MD setting) till the new autocalibration parameter values are reached.
- 10: Autocalibration Mode 2. Parameters are updated by one LSB only. After the update, autocalibration will already calculate new parameters again.
- 11: Autocalibration Mode 3. Parameters are updated by one LSB at every angle range of 11.25° till the new autocalibration parameter values are reached.

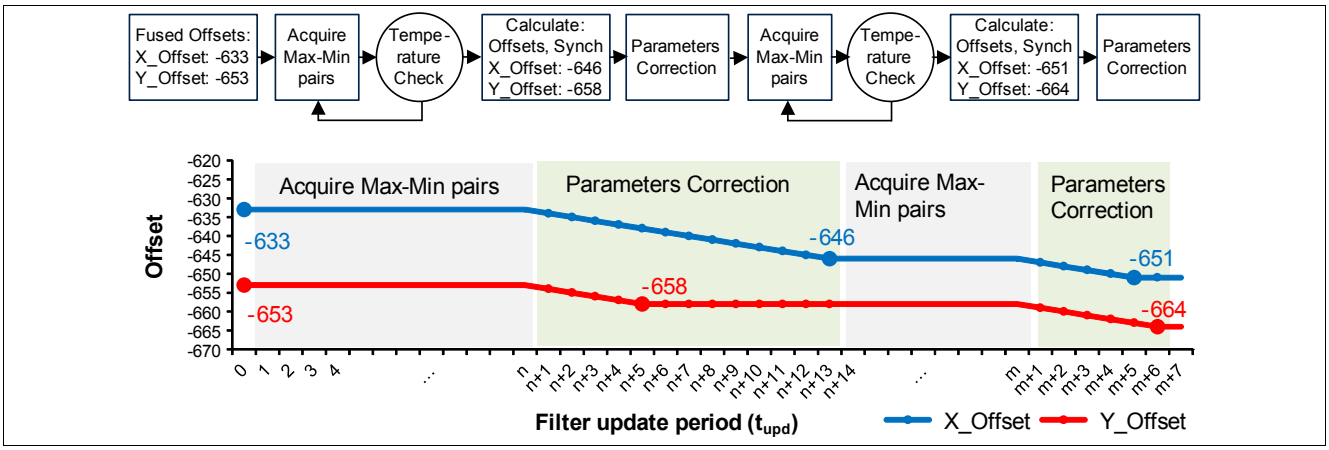

Figure 4-1 Parameter correction with autocalibration mode 1

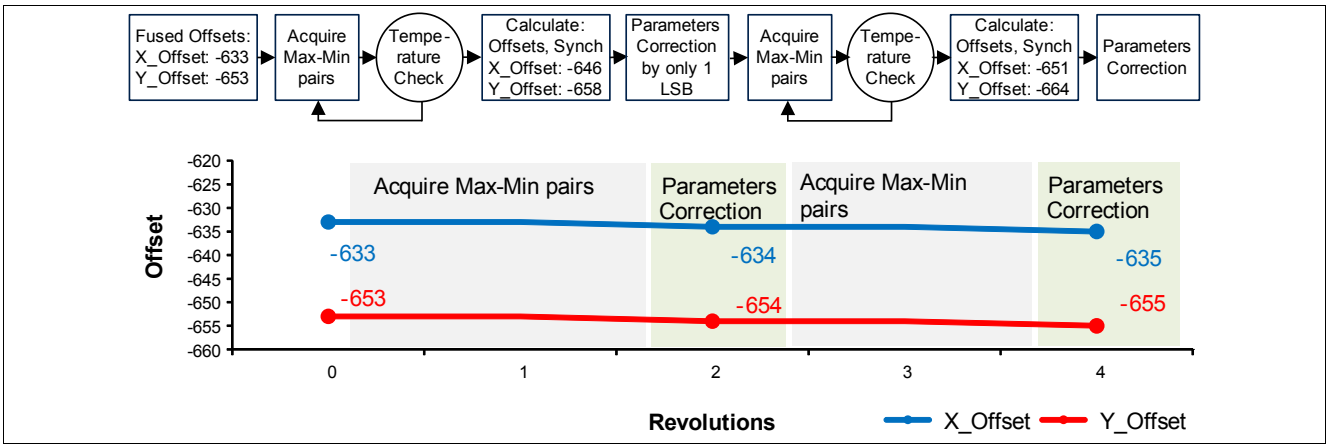

Figure 4-2 Parameter correction with autocalibration mode 2

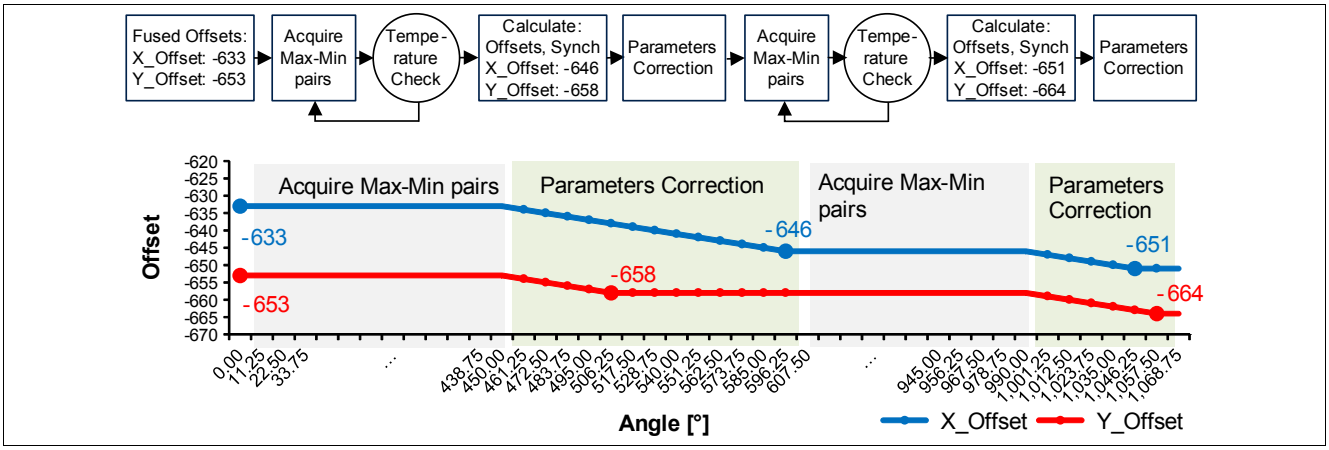

Figure 4-3 Parameter correction with autocalibration mode 3

The autocalibration mode 1 is the quickest mode to correct the parameters. Mode 2 is the slowest method, but since the parameters are updated by one digit only, it offers robustness against corrupted maxima - minima pair (in case of a spike, for example).

Condition for usability of Autocalibration:

The autocalibration algorithm relies on the collection of maximum and minimum values of the raw X- and Y-signals of the sensing elements, therefore it is suitable for applications where a rotor is continuously turning (full 360° rotations). Compensation parameters for offset and amplitude synchronicity error are calculated from these minima and maxima only if the temperature did not change by more than 5 Kelvin during their collection, to avoid temperature-drift induced errors.

For the sensor to be accurate in autocalibration mode, it has to be assured in the application that the calibration parameters are updated frequently. Thus, autocalibration should only be used in applications where the magnet regularly rotates by at least one full turn (internal TLE5012B check of full turn requires maximum 1.5 revolutions) at a temperature which is constant within 5 Kelvin.

Enabling/Disabling of Autocalibration:

When switching autocalibration on or off, the TLE5012B may erroneously trigger the S_FUSE error bit in the status register, which indicates a configuration CRC error, which is also displayed permanently in the Safety Word of the SSC communication.

When autocalibration is ON and has to be disabled: write the correct CRC for autocalibration OFF before disabling autocalibration. This way the sensor will see a consistent state when the first runtime CRC check is done again and no CRC error will occur. The correct CRC must be calculated on the microcontroller side.

When autocalibration is OFF and has to be enabled or just restarted: after switching the autocalibration mode ON, the Status Register should be read via SSC after three t_{update} periods and an occurring S_FUSE error should be ignored.

Changing TLE5012B default Configuration, if Autocalibration is enabled

Changing certain TLE5012B default configurations while autocalibration is enabled could lead to corrupted autocalibration parameters. Therefore, disable autocalibration prior to change the angle direction (ANG_DIR bit on MOD_2 register), prediction (PREDICT bit on MOD_2 register) or the angle base (ANG_BASE bits on MOD_3 register). Once these parameters have been changed, enable autocalibration again.

An initialization sequence for the case of changing angle direction is shown in **Table 4-1**. This sequence is also valid for prediction and for angle base. In case of angle base additonal write after the first write is required in order to re-configure the new angle base value.

Table 4-1 Initialization via SSC / SPI to change ANG_DIR

Step	Command type	Register	Value	Description
0 (default)	-	MOD_2	0x0801	Angle Range = 360°, Angle Direction = counter clockwise, Autocal = on This is the default value.
1	W (write)	MOD_2	0x0808	Angle Range = 360°, Angle Direction = clockwise, Autocal = off Autocal is being deactivated, and Angle direction can be changed. The deactivated autocal stops any running min/max search and clears the min/max_x/y registers before any offset (and amplitude) parameters can change.
2	Wait	-	128µs	A minimum of two t_{update} periods are needed until all settings have been adopted by the sensor. Since this delay depends on the timing of the SPI write in comparison to the sensors internal execution timing it is recommended to wait three t_{update} (3*42.7µs by default) for time margin. In case t_{update} is configured to 85µs (or higher), extend the time to fulfill $3*t_{update}$. This waiting time is also important before reading the default parameters (OFFX, OFFY, SYNCH, IFAB, MOD4, TCO_Y, T25O) in case it is necessary.
3	W	MOD_2	0x0809	Angle Range = 360°, Angle Direction = clockwise, Autocal = on Angle direction has been changed previously and now autocal is again activated.
4	Wait	-	128µs	Similar to wait above. Sensor needs time to recognize that the CRC check of the parameter registers (Addresses 0x08...0x0F) need to be disabled due to reactivated autocal.
5	R (read)	STAT	S_FUSE error	S_FUSE error may be present due to reconfiguration (as explained on **Note on Page 23**). Reading out the STAT register the S_FUSE is reset (SPI Safety Word will not show anymore an error because it has been cleared).
6	R	STAT	S_FUSE cleared	This read is only necesary if the previosu SPI Safety Word is not checked for a system-error (includes S_FUSE).

4.1.1 Angle Error adder with Autocalibration enabled

With constant temperatures (ΔT < 5 Kelvin) or parts rotating faster than the temperature changes, the autocalibration angle error is as specified in the **TLE5012B Data Sheet**. If autocalibration is enabled when the temperature changes by more than 5 Kelvin within 1.5 revolutions, the last valid autocalibration parameters will still be used, leading to an additional angle error. Such cases will happen when the rotating part is halted and the temperature is changing by more than 5 Kelvin or the rotating part is moving too slowly compared to the external temperature changes (see **Figure 4-4**).

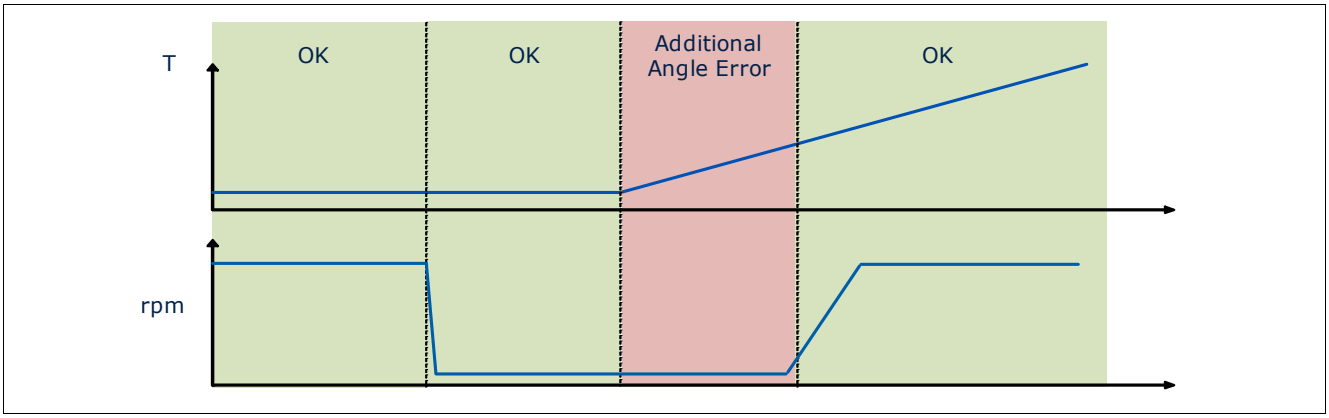

Figure 4-4 Cases where an angle error adder has to be included if autocalibration is enabled

The angle error adder is described in the **TLE5012B Data Sheet** (Figure 4-3, page #25 on the TLE5012B Data Sheet, Rev. 2.0 from 2014-02) and depends on the initial temperature. To read the right angle error adder select the initial temperature and move through the x-axis as many degrees as the delta between the final temperature and the initial temperature. Then read the y-axis value at this delta and add it to the specified angle error, which already contains lifetime drifts. Some cases are shown in **Table 4-2**:

Table 4-2 Additional angle error examples

$T_{junction}$ range	Autocal	T/1.5 revolutions	Additional angle error
-40°C ... 150°C	Off	-	No additional angle error
-40°C ... 150°C	On	< 5 Kelvin	No additional angle error
-40°C ... 150°C	On	10 Kelvin	<0.2°
-40°C ... 150°C	On	20 Kelvin	<0.35°
-40°C ... 150°C	On	50 Kelvin	<0.85°
>135°C	On	15 Kelvin	<3.3°

As the magnetic field decreases with higher temperatures, angle errors due to increases of temperature are more critical than decreases of temperature. As the additional angle error described in the **TLE5012B Data Sheet** applies to the worst case (temperature increasing), the angle error adder due to decreasing temperature changes will always be smaller.

If a parallel SSC interface is in place, autocalibration can be disabled when a critical case described in **Figure 4-4** occurs. A temperature check in the microcontroller can be implemented to disable and enable autocalibration (and thus to reset any wrong minima and maxima) on temperature changes by more than 5 Kelvin during 1.5 revolutions. When autocalibration is disabled the default calibration parameters stored in the laser fuses will be used for the X and Y raw values correction, and the angle error will fulfill the specifications described in the **TLE5012B Data Sheet**.

4.2 Prediction mode

The TLE5012B has an optional prediction feature, which serves to reduce the speed dependent angle error in applications where the rotation speed does not change abruptly. Prediction (enable PREDICT bit on MOD_2 register) uses the difference between current and last two angle values to approximate the angle value which will be present after the delay time (see **Figure 4-5**). The output value is calculated by adding this difference to the measured value, according to **Equation (4.1)**.

$$\alpha(t+1) = \alpha(t) + \alpha(t-1) - \alpha(t-2) \tag{4.1}$$

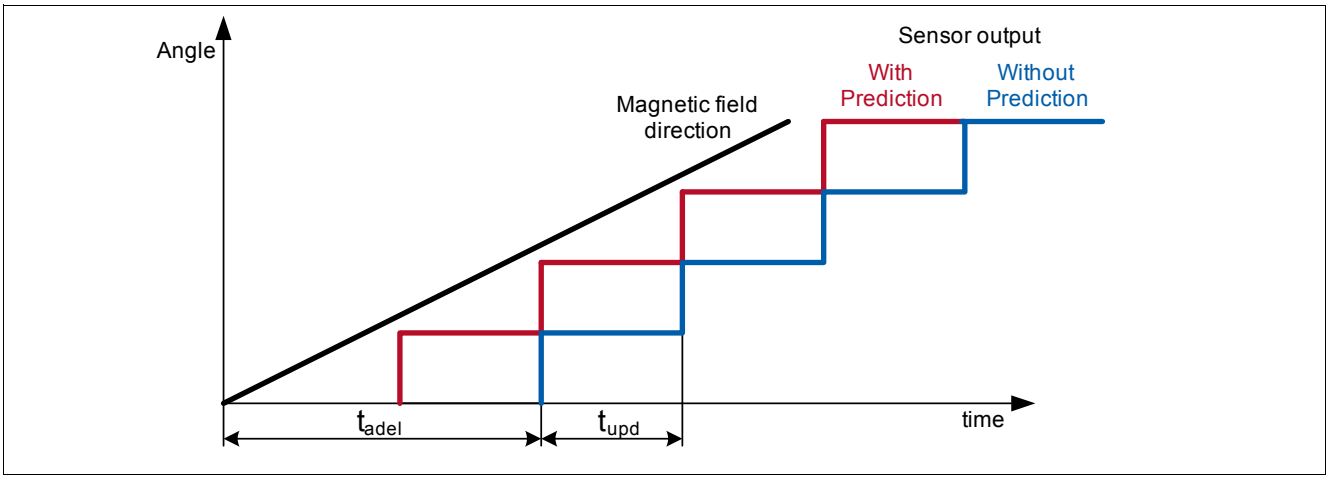

Figure 4-5 Delay of sensor output

Revolution counter on prediction mode

The revolution counter (REVOL bits on AREV register) counts full rotations of the magnetic field. It increments when the measured angle crosses the 0° point in counter-clockwise rotation direction, and it decrements when the 0° point is crossed in clockwise rotation direction. The revolution counter always works with the measured angle (current angle and not predicted angle). Therefore, the prediction angle may already indicate that the 0° has been crossed but the revolution counter may still not increase or decrease if the current calculated angle has not yet changed quadrant. Once the current calculated angle crosses 0°, the revolution counter will be updated. The **Figure 4-6** illustrates an example; in the second picture the angle value with prediction has already crossed the 0° (from 1° to 359°), but the revolution counter has not yet decreased (remains 43):

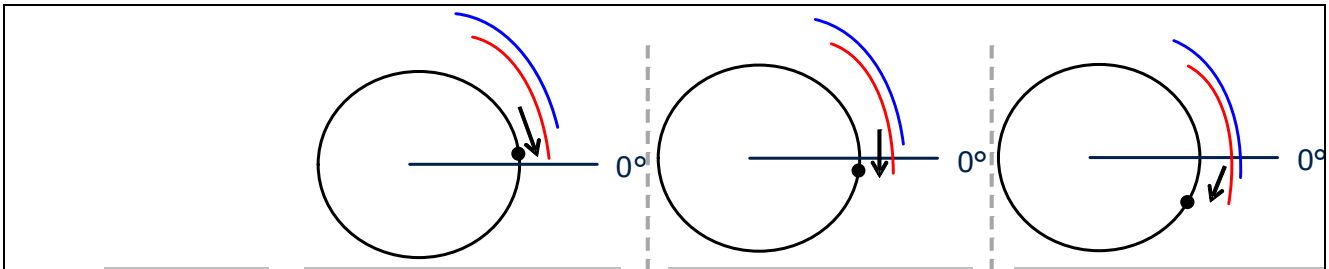

	Prediction	Angle Value	Revolution counter	Angle Value	Revolution counter	Angle Value	Revolution counter
Register	MOD_2; 08_H	AVAL; 02_H	AREV; 04_H	AVAL; 02_H	AREV; 04_H	AVAL; 02_H	AREV; 04_H
Field	PREDICT [2]	ANG_VAL [14:0]	REVOL [8:0]	ANG_VAL [14:0]	REVOL [8:0]	ANG_VAL [14:0]	REVOL [8:0]
Without prediction	0	3	43	1	43	359	42
With prediction	1	1	43	359	43	357	42

Figure 4-6 Revolution counter with prediction mode disabled/enabled

4.3 Calculation of the Junction Temperature

The total power dissipation P_{TOT} of the chip leads to self-heating, which increases the junction temperature T_J above the ambient temperature.

The power multiplied by the total thermal resistance R_{thJA} (junction to ambient) yields the junction temperature. R_{thJA} is the sum of the two components Junction to Case and Case to Ambient.

$$R_{thJA} = R_{thJC} + R_{thCA} \tag{4.2}$$

$$T_J = T_A + \Delta T$$

$$\Delta T = R_{thJA} \times P_{TOT} = R_{thJA} \times (V_{DD} \times I_{DD} + \sum_Q V_Q \times I_Q)$$ (I_{DD}, I_Q > 0, if direction is into IC)

Example (assuming no load on V_{out}):

$$V_{DD} = 5V \tag{4.3}$$

$$I_{DD} = 14mA$$

$$\Delta T = 150\left[\frac{K}{W}\right] \times (5[V] \times 0.014[A] + 0[VA]) = 10.5K$$

4.4 Calculation of the Temperature

The TLE5012B provides the temperature in the TEMPER bits of the FSYNC register via the SSC interface (see **Chapter 6.2**) or with an extended SPC frame (see **Table 5-8**). TEMPER is a compensated value of the temperature at the ADC. The compensation is done with an offset value at 25°C temperature (T25O), which is specific for each device. The T25O value is measured for each device during production and it is stored in the fuses.

The temperature in degrees Celsius (°C) can be calculated using the formula provided in **Chapter 6.2** and reading the TEMPER bits. TEMPER is a signed register, to convert the value to digits proceed as described in **Chapter 6.1.3**. As an example, for a TEMPER value of 110111000_B, the value in digits is calculated in **Equation (4.4)**:

$$Value = -b_{MSB} * 2^{N-1} + \sum_{i=0}^{N-2} b_i * 2^i = -1*2^{9-1} + 1*2^{9-2} + 0*2^{9-3} + 1*2^{9-4} + 1*2^{9-5} + \tag{4.4}$$

$$+1*2^{9-6} + 0*2^{9-7} + 0*2^{9-8} + 0*2^{9-9} = -1*2^8 + 1*2^7 + 1*2^5 + 1*2^4 + 1*2^3 =$$

$$= -256 + 128 + 32 + 16 + 8 = -72$$

Therefore, the temperature in degrees Celsius is calculated in **Equation (4.5)**:

$$T[°C] = \frac{TEMPER[dig] + 152[dig]}{2.776[dig/°C]} = \frac{-72+152}{2.776} = \frac{80}{2.776} = 28.8°C \tag{4.5}$$

TEMPER typical accuracy error is around +/-5°C across the whole temperature range.

TEMPER is a limited register. For a whole temperature range use the T_RAW register, which can be compensated with the T25O register. The relation between TEMPER and T_RAW is shown in **Equation (4.6)**:

$$TEMPER\ [dig] = T\_RAW\ [dig] - T25O[dig] - 530[dig] \tag{4.6}$$

4.5 Switching to external clock

External clock operation is possible for the interface configurations SSC only, SSC & PWM, and SSC & SPC. To switch the TLE5012B to external clock supply the following procedure is used:

- Trigger a chip reset by writing a “1” to the AS_RST bit (address 01_H[0]) via SSC interface
- Within 120µs after the reset command, write a “1” to the CLK_SEL bit (address 06_H[4])
- After the power-on time (max. 7 ms), read the CLK_SEL bit via SSC interface to confirm that external clock is selected

Note: If the clock source (CLK_SEL) bit is switched to external clock during operation of the sensor it may occur (at a chance of roughly 1%) due to an internal timing conflict, that the switching command is not accepted and the chip keeps operating on internal clock.

5 Interfaces

5.1 Interfaces overview

The TLE5012B supports five interfaces which can be choosen depending on the specific application:

- SSC (Synchronous Serial Communication)
- PWM (Pulse Width Modulation)
- SPC (Short PWM Code)
- HSM (Hall Switch Mode)
- IIF (Incremental Interface)

SSC: the SSC is a digital interface which allows bi-directional data transfer. The TLE5012B uses 3-pin as described in the **Chapter 5.2**. SSC allows to read additional data to the angle value from registers (angle speed, raw values, temperature, etc.) and to setup different configurations (resolution, enable/disable of features such as prediction or autocalibration, etc.). Check **Chapter 6** for details. SSC allows a high data transfer with CRC (Cyclic Redundancy Check) and secure communication (use of the Safety Word after data transfer). Up to 4 sensors can be used with SSC. SSC is meant for short distances (TLE5012B and ECU to be placed on the same PCB)

PWM: the PWM is an unidirectional interface. Only one line is needed in which the angle value is transmitted. The angle value corresponds to the duty cycle of the signal, with 0° represented by a 6.25% duty cycle and 93.75% representing the maximum angle. Safety Analysis results would be communicatd via duty cycle below 2% or above 98%. The frequency of the PWM interface can be set via SSC interface. PWM is meant to support distances up to 5 meters.

SPC: the SPC is an interface based on the SENT protocol. The ECU (master µC) sends a Trigger Nibble which wakes up the TLE5012B to transmit the angle value (12bit or 16bit resolution depending on the number of nibbles). If desired, the temperature can also be transmitted in two extra nibbles. The SPC also sends a CRC and an end-pulse to terminate the communication. One line is needed for the transmission and the pins #1 and #2 are used to set the slave number. Up to four slaves can be connected to one ECU; the ECU Trigger Nibble length will wake up the respective sensor. SAE International describes the SENT protocol (SAE J2716) distance as up to 5 meters: *“Combined resistance for all connector shall have less than 1 Ohms per line over total vehicle life. The bus wiring shall utilize cables with less than 0.1nF per meter of wire length. the maximum cable length shall be 5 meters”.*

HSM: the HSM is an interface that emulates the output of three Hall switches, therefore three uni-directional lines are required. Only the angle position can be calculated from the output. The switching hysteresis and the pole-pair configuration can be selected via SSC. By default the number of pole pairs is set to 5.

IIF: the IIF is an interface that emulates an optical encoder. Three uni-directional lines are required: two for Phase A and Phase B and a third one for the IIF Index (which indicates a 0° pass). Phase A and Phase B pulse out phase-shifted pulses for each “step resolution” that the angle moved. The two Phases are needed to also track the rotation direction (clockwise or counter-clockwise). At start-up the IIF pulses out the angle value. Different IIF modes, step resolutions and hysteresis values can be configurated via SSC. IIF interface is meant for short distances (TLE5012B and ECU to be placed on the same PCB). It is used for high-speed applications such as electrically commutated motor drives.

SSC can be used in parallel to any other interface (PWM, SPC, HSM or IIF).

More details on the default configuration of each derivate are described in **Chapter 7**.

Table 5-1 summarizies the key characteristics and parameters that have to be considered when choosing an interface:

Table 5-1 Main interface characteristics

Characteristics	IIF	PWM	SPC	HSM	SSC
Data/Values	angle steps (angle value at start-up)	angle value	angle value (temperature optional)	angle value period	many data available in the registers
Distance[1)]	short-medium	long (up to 5m)	long (up to 5m)	medium	short
Data rate	high	low-medium	low	high	high
Resolution	high	high	high	low	high
Check	IIF Index (0° pulse). Phase A/B as complementary signal.	Duty cycle range diagnostics.	CRC	HS1/HS2/HS3 as complementary signals.	Safety Word in the data transfer. Availability of status and diagnostics registers.
Max. slaves in bus mode	no bus mode	no bus mode	4	no bus mode	4
Communication lines[2)]	3 (only two without IIF Index)	1	1	3	3
Communication	unidirectional	unidirectional	unidirectional (triggered)	unidirectional	bidirectional
SSC possible	Yes	Yes	Yes	Yes	Yes
Other	Emulates Optical Encoder		Based on SENT protocol	Emulates (three) Hall Switches	3-wire SPI

1) Not subject to production test. Distance subject to application circuit and environment.

2) Communication lines between slave (TLE5012B) and master (microcontroller). External clock not included

5.2 Synchronous Serial Communication (SSC) Interface

5.2.1 SSC Timing Definition

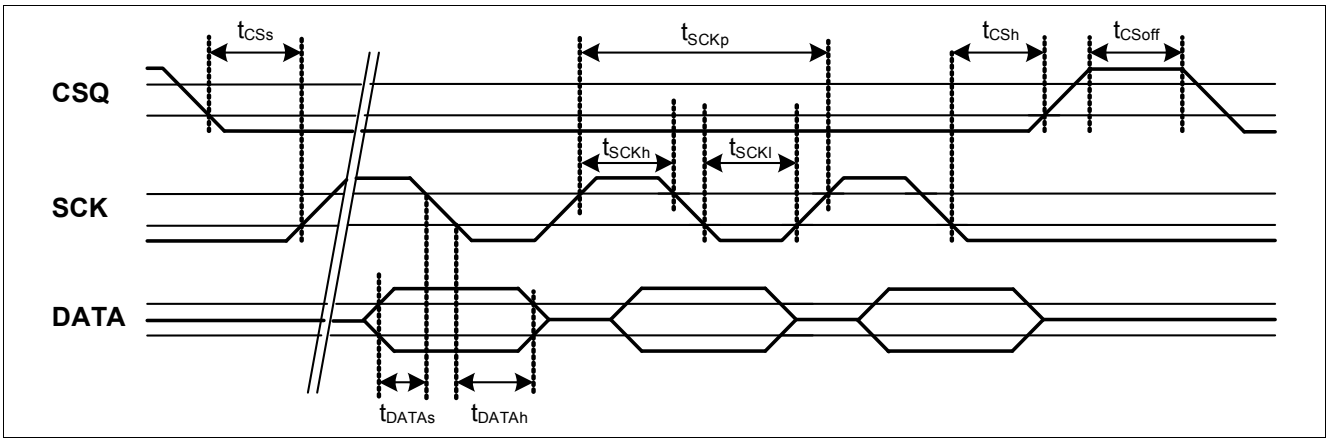

Figure 5-1 SSC timing

SSC Inactive Time (CS_{off})

The SSC inactive time defines the delay time after a transfer before the TLE5012B can be selected again.

Table 5-2 SSC push-pull timing specification

Parameter	Symbol	Values			Unit	Note / Test Condition
		Min.	Typ.	Max.		
SSC baud rate	f_{SSC}		8.0		Mbit/s	1)
CSQ setup time	t_{CSs}	105			ns	1)
CSQ hold time	t_{CSh}	105			ns	1)
CSQ off	t_{CSoff}	600			ns	SSC inactive time 1)
SCK period	t_{SCKp}	120	125		ns	1)
SCK high	t_{SCKh}	40			ns	1)
SCK low	t_{SCKl}	30			ns	1)
DATA setup time	t_{DATAs}	25			ns	1)
DATA hold time	t_{DATAh}	40			ns	1)
Write read delay	t_{wr_delay}	130			ns	1)
Update time	$t_{CSupdate}$	1			µs	See **Figure 5-5** 1)
SCK off	t_{SCKoff}	170			ns	1)

1) Not subject to production test - verified by design/characterization

Table 5-3 SSC open-drain timing specification

Parameter	Symbol	Values			Unit	Note / Test Condition
		Min.	Typ.	Max.		
SSC baud rate	f_{SSC}		2.0		Mbit/s	Pull-up Resistor = 1kΩ[1)]
CSQ setup time	t_{CSs}	300			ns	[1)]
CSQ hold time	t_{CSh}	400			ns	[1)]
CSQ off	t_{CSoff}	600			ns	SSC inactive time[1)]
SCK period	t_{SCKp}	500			ns	[1)]
SCK high	t_{SCKh}		190		ns	[1)]
SCK low	t_{SCKl}		190		ns	[1)]
DATA setup time	t_{DATAs}	25			ns	[1)]
DATA hold time	t_{DATAh}	40			ns	[1)]
Write read delay	t_{wr_delay}	130			ns	[1)]
Update time	$t_{CSupdate}$	1			µs	See **Figure 5-5**[1)]
SCK off	t_{SCKoff}	170			ns	[1)]

1) Not subject to production test - verified by design/characterization

5.2.2 SSC Data Transfer

The SSC data transfer is word-aligned. The following transfer words are possible:

- Command Word (to access and change operating modes of the TLE5012B)
- Data words (any data transferred in any direction)
- Safety Word (confirms the data transfer and provides status information)

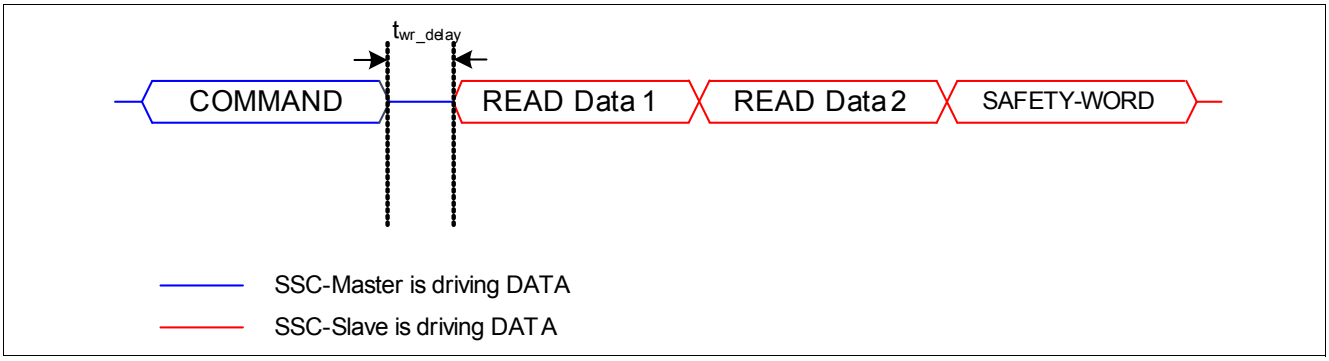

Figure 5-2 SSC data transfer (data-read example)

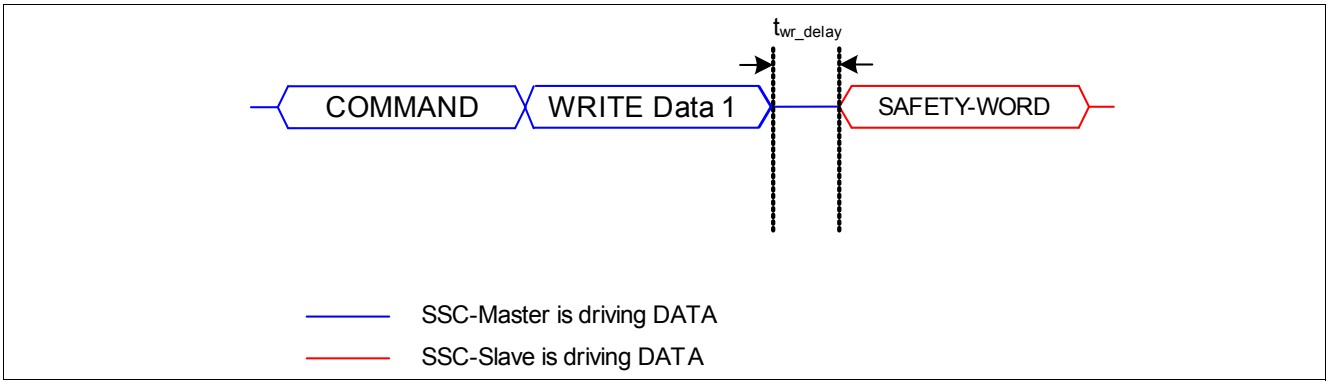

Figure 5-3 SSC data transfer (data-write example)

Command Word

SSC Communication between the TLE5012B and a microcontroller is generally initiated by a command word. The structure of the command word is shown in **Table 5-4**, where the Update (UPD) bit allows the access to current values or updated values. If an update command is issued and the UPD bit is set, the immediate values are stored in the update buffer simultaneously. This enables a snapshot of all necessary system parameters at the same time. Bits with an update buffer are marked by an “u” in the Type column in register descriptions. The initialization of such an update is described on page **35**.

Table 5-4 Structure of the Command Word

Name	Bits	Description
RW	[15]	Read - Write 0: Write 1: Read
Lock	[14..11]	4-bit Lock Value 0000_B: Default operating access for addresses 0x00:0x04, 0x14:0x15, 0x20, 0x30 1010_B: Configuration access for addresses 0x05:0x11

Table 5-4 Structure of the Command Word (cont'd)

Name	Bits	Description
UPD	[10]	Update-Register Access 0: Access to current values 1: Access to values in update buffer
ADDR	[9..4]	6-bit Address
ND	[3..0]	4-bit Number of Data Words (if bits set to 0000_B, no safety word is provided)

Safety Word

The safety word consists of the following bits:

Table 5-5 Structure of the Safety Word

Name	Bits	Description
STAT[1)]	Chip and Interface Status	
	[15]	Indication of chip reset or watchdog overflow (resets after readout) via SSC 0: Reset occurred 1: No reset
	[14]	System error (e.g. overvoltage; undervoltage; V_{DD}-, GND- off; ROM;...) 0: Error occurred (S_VR; S_DSPU; S_OV; S_XYOL: S_MAGOL; S_FUSE; S_ROM; S_ADCT) 1: No error
	[13]	Interface access error (access to wrong address; wrong lock) 0: Error occurred 1: No error
	[12]	Invalid angle value (NO_GMR_A = 1; NO_GMR_XY = 1) 0: Angle value invalid 1: Angle value valid
RESP	[11..8]	Sensor number response indicator The sensor number bit is pulled low and the other bits are high (one-cold encoding, e.g. for the sensor -or slave- number "00" the RESP bits are "1110". For the sensor -or slave- number "10" the RESP bits are "1011").
CRC	[7..0]	Cyclic Redundancy Check (CRC), which includes the STAT and RESP bits.

1) When an error occurs, the corresponding status bit in the safety word remains "low" until the STAT register (address 00_H) is read via SSC interface. Once the STAT register has been read, the safety word status bits will be "high" again.

Bit Types

The types of bits used in the registers are listed here:

Table 5-6 Bit Types

Abbreviation	Function	Description
r	Read	Read-only registers
w	Write	Read and write registers
u	Update	Update buffer for this bit is present. If an update is issued and the Update-Register Access bit (UPD in command word) is set, the immediate values are stored in this update buffer simultaneously. This allows a snapshot of all necessary system parameters at the same time.

Data communication via SSC

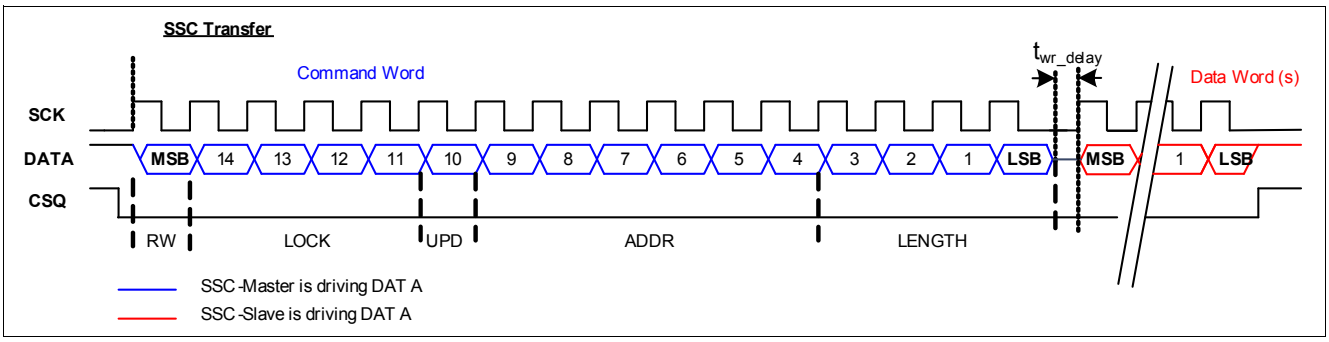

Figure 5-4 SSC bit ordering (read example)

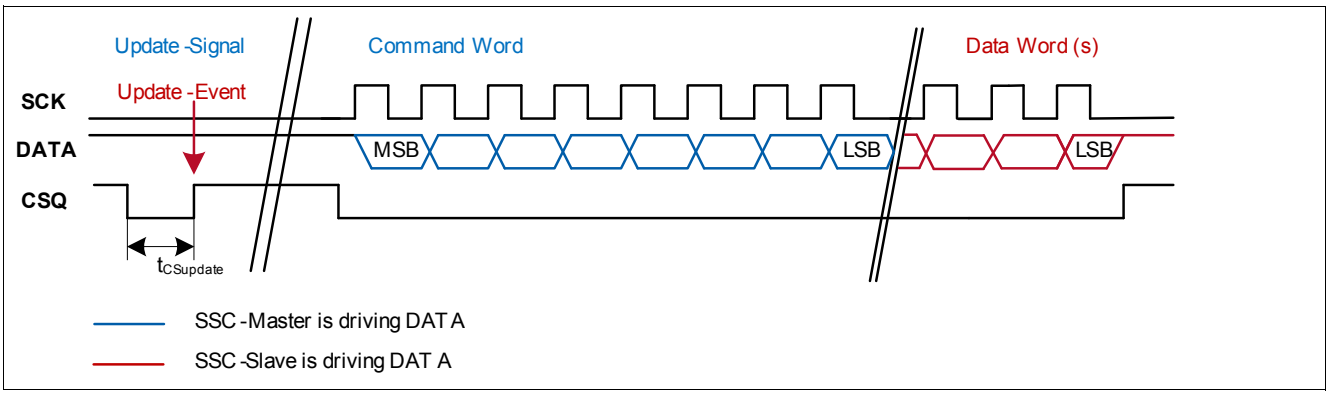

Figure 5-5 Update of update registers

The data communication via SSC interface has the following characteristics:

- The data transmission order is Most-Significant Bit (MSB) first, Least-Significant Bit (LSB) last.
- Data is put on the data line with the rising edge of SCK and read with the falling edge of SCK.
- The SSC Interface is word-aligned. All functions are activated after each transmitted word.
- After every data transfer with ND ≥ 1, the 16-bit Safety Word is appended by the TLE5012B.
- A “high” condition on the Chip Select pin (CSQ) of the selected TLE5012B interrupts the transfer immediately. The CRC calculator is automatically reset.
- After changing the data direction, a delay t_{wr_delay} (see **Table 5-3**) has to be implemented before continuing the data transfer. This is necessary for internal register access.
- If in the Command Word the number of data is greater than 1 (ND > 1), then a corresponding number of consecutive registers is read, starting at the address given by ADDR.
- In case an overflow occurs at address $3F_H$, the transfer continues at address 00_H.
- If in the Command Word the number of data is zero (ND = 0), the register at the address given by ADDR is read, but no Safety Word is sent by the TLE5012B. This allows a fast readout of one register.
- At a rising edge of CSQ without a preceding data transfer (no SCK pulse, see **Figure 5-5**), the content of all registers which have an update buffer is saved into the buffer. This procedure serves to take a snapshot of all relevant sensor parameters at a given time. The content of the update buffer can then be read by sending a read command for the desired register and setting the UPD bit of the Command Word to “1”.
- After sending the Safety Word, the transfer ends. To start another data transfer, the CSQ has to be deselected once for at least t_{CSoff}.
- By default, the SSC interface is set to push-pull. The push-pull driver is active only if the TLE5012B has to send data, otherwise the DATA pin is set to high-impedance.

5.2.3 TLE5012B in bus mode

Up to four slaves can be connected on the same bus (e.g. four TLE5012B, or two TLE5012B and two Linear Hall). The master microcontroller (µC) will need four CSQ (chip select) pins to connect to each of the slaves (Daisy Chain schemes are not possible).

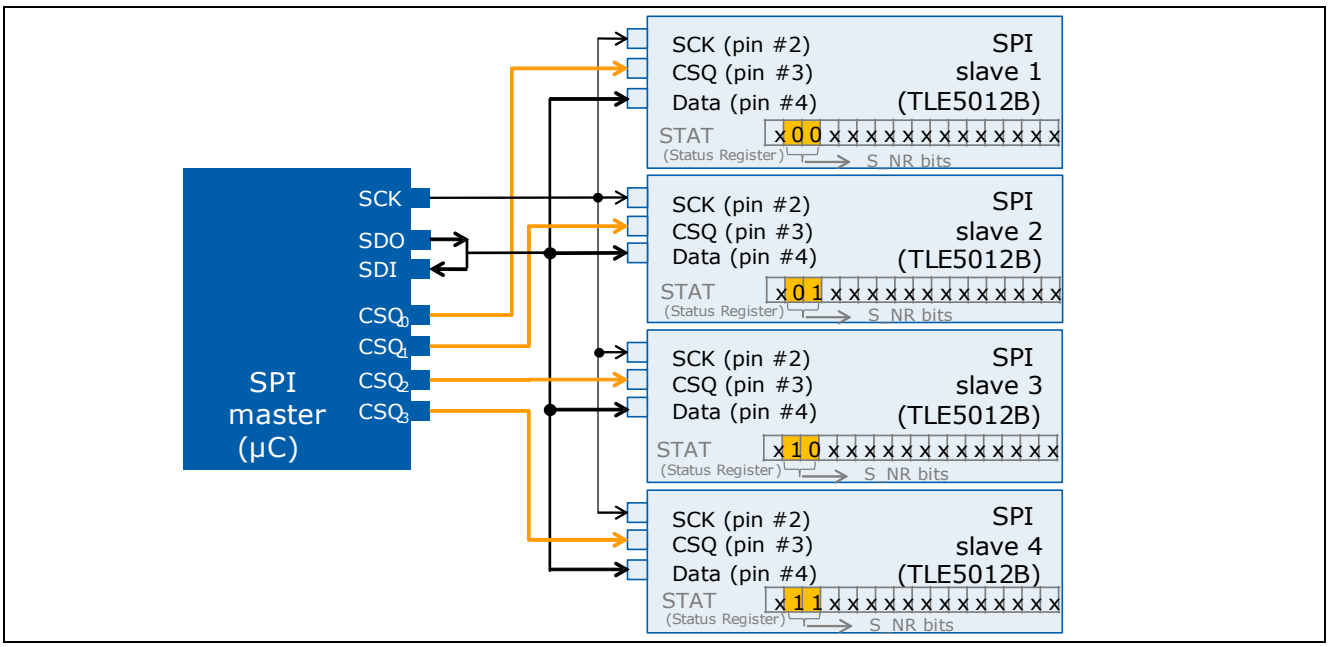

Figure 5-6 Example of four slaves connected to a bus with one master with SSC interface

The TLE5012B particularity is that it is a 3-pin SSC (SPI) slave. One of these pins is for the Clock, another one is for the Chip Select and the third one is for the Data (input and output). Since there is only one pin for the Data, the output and input of the master have to be connected. When the sensor transmits data the master's output pin (SDO pin) has to be switched to high ohmic.

Clock generation

As described in **Chapter 5.2.1** the master has to send a command word to start the communication between master and slave. After that, the master has to trigger a clock so the slave can respond with the data and/or safety word. To generate a clock set the direction of the master's SDO pin to input and next write 0xFFFF in the SDO register. A delay t_{wr_delay} (see **Table 5-2**) has to be implemented before generating the clock for the answer.

With this a pulse of "1s" is generated and the clock triggered. Since the SDO has been set as an input pin, this pulse of "1s" will not be transmitted and will not interefere with the data coming from the slave (sensor). This step (writing 0xFFFF) has to be repeated as many times as reads from the slave are expected. This is usually twice; one for the data and one for the safety word.

Slave Number configuration at start-up

With SSC the CSQ line ensures that the data sent -or received- goes to -or comes from- the correct slave. Still, if the slave number (S_NR bits) are not configurated correctly at start-up, the safety word may report a wrong slave number. The slave number may also be wrong in configurations with one single slave.

To ensure that the received slave number in the safety word is correct (RESP bits), configure the slave numbers at start up with a write command. The slave number bits are described in the Status Register.

For configurations with only one or two slaves, it is also possible to configure the slave number at start up with the SCK and IFC pins as done for the SPC interface (see **Figure 5-12**). The particularity with SSC interface is that the SCK is a line connected to the master and therefore can only have on status at start-up. Setting the IFC pin at "high" or "low" two slave numbers can be configurated.

5.2.4 Cyclic Redundancy Check (CRC)

A Cyclic Redundancy Check (CRC) is sent in the last 8 bits of the safety word.

- This CRC is according to the J1850 Bus Specification.
- Every new transfer restarts the CRC generation.
- The Command Word and all Data Words (in any direction) will be taken into account to generate the CRC. The non-CRC bits -the 8 upper bits- of the safety word).
- Generator polynomial: X8+X4+X3+X2+1, but for the CRC generation the fast-CRC generation circuit is used (see **Figure 5-7**)
- The seed value of the fast CRC circuit is '11111111_B'.
- The remainder is inverted before transmission.

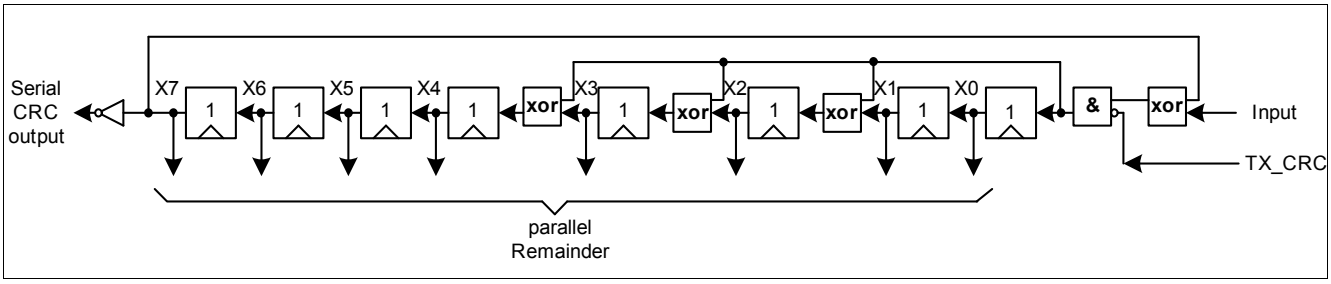

Figure 5-7 Fast CRC polynomial division circuit

CRC calculation example with SSC interface

In this example the CRC generation for a typical SSC data transfer is shown. In this case the feature *Prediction* will be enabled, so the SSC data transfer consists of a command word and a write data word send by the master (microcrontroller) followed by a safety word -which contains the CRC- send by the slave (TLE5012B).

The command word 5081_H indicates that a write data word (MSB of the command word at "0") will follow and that this data has to be written in the address 08_H (MOD_2 register). The four LSBs of the command Word indicate how many 16-bit words will follow ("0001B" in this case).

The write word 0804_H is sent to enable *Prediction*, one of the features available with the TLE5012B. The PREDICT bit (bit 2 of the WRITE Data 1) will be set at "1".

Note: Before sending a Write Data, it is necessary to receive a Read Data to ensure that the bits that will not be configurated (changed) are not overwritten with a wrong value (e.g. read-modify-write operation).

After writing the new configuration parameters, the sensor will send a safety word $FE89_H$ indicating the status (STAT), the sensor number (RESP, "1110" in this case since there is only one sensor named "00") and the CRC (STAT and RESP are not included in its generation). In this case the CRC transmitted is 89_H.

CRC generation

At the beginning the CRC is set at 00_H (see **Figure 5-9**, line 1). The first step to generate the CRC consists in a XOR logical operation (line 3) between the 8 MSB bits of the Command Word (line 1) and the seed value 1111111_B (line 2). Align the generator polynominal (line 4) to the non-zero MSB of the dataset out of the first step (line 3) and calculate another XOR (line 5).

$$x^8 + x^4 + x^3 + x^2 + 1$$
$$100011101$$

Figure 5-8 TLE5012B's CRC generator polynomial for the SSC interface

From this point onwards reiterative XOR logical operations between the data (result of the previous operation) and the generator polynominal are done till the remaining bits is equal or smaller than $00FF_H$ (only 8 bits left). The

genarator polynomial always has to be aligned to the non-zero MSB of the dataset. Finally the CRC value (line 33) has to be inverted (XOR with a all “1”s polynominal) to generate the Inverted Remainder (line 34).

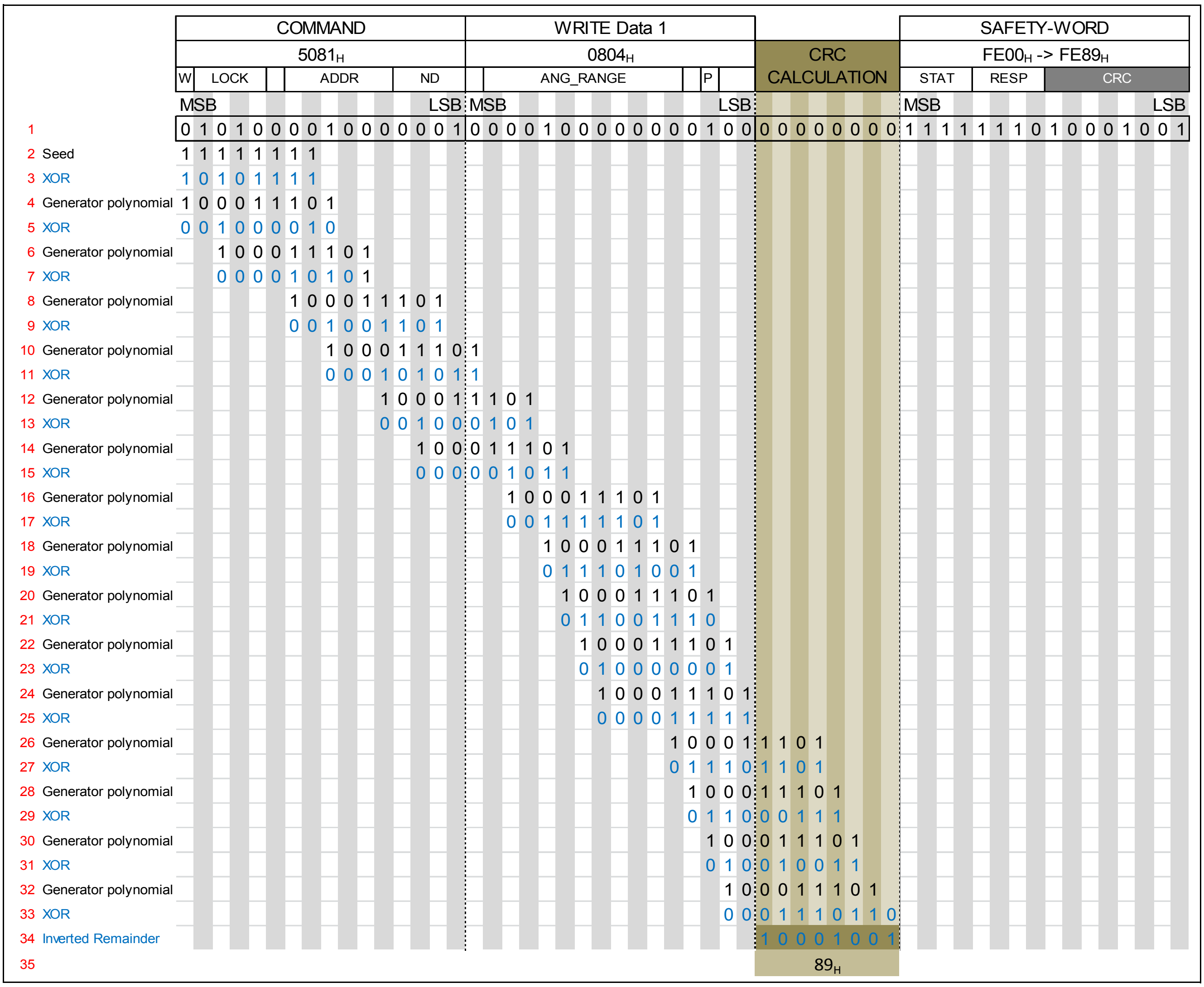

Figure 5-9 CRC generation example with SSC interface

CRC generation software code example

Two software codes with C-language to generate CRC are provided. The first example is a more intuitive though slower solution, since two iterative loops are done; a loop for each byte and an inner loop for each bit. It is also a compact solution.

The second code is faster, since the inner loop is implemented as a look-up table (LUT). Therefore, the CRC does not need to be calculated each time, but is taken from the look-up table, saving some computational time. As a look-up table is required, some extra memory space is needed compared to the first example.

Example 1:

```
//"message" is the data transfer for which a CRC has to be calculated.
//A typical "message" consists of 2 bytes for the command word plus 2 bytes for the
//data word plus 2 bytes for the safety word.
//"Bytelength" is the number of bytes in the "message". A typical "message" has 6
//bytes.
unsigned char CRC8(unsigned char *message, unsigned char Bytelength)
{

//"crc" defined as the 8-bits that will be generated through the message till the
//final crc is generated. In the example above this are the blue lines out of the
//XOR operation.
 unsigned char crc;

//"Byteidx" is a counter to compare the bytes used for the CRC calculation
 unsigned char Byteidx, Bitidx;

//Initially the CRC remainder has to be set with the original seed (0xFF for the
//TLE5012B).
 crc = 0xFF;

//For all the bytes of the message.
 for(Byteidx=0; Byteidx<Bytelength; Byteidx++)
 {
//"crc" is calculated as the XOR operation from the previous "crc" and the "message".
//"^" is the XOR operator.
  crc ^= message[Byteidx];
//For each bit position in a 8-bit word
  for(Bitidx=0; Bitidx<8; Bitidx++)
  {
//If the MSB of the "crc" is 1(with the &0x80 mask we get the MSB of the crc).
    if((crc&0x80)!=0)
   {
//"crc" advances on position ("crc" is moved left 1 bit: the MSB is deleted since it
//will be cancelled out with the first one of the generator polynomial and a new bit
//from the "message" is taken as LSB.)
    crc <<=1;
//"crc" is calculated as the XOR operation from the previous "crc" and the generator
//polynomial (0x1D for TLE5012B). Be aware that here the x8 bit is not taken since
//the MSB of the "crc" already has been deleted in the previous step.
    crc ^= 0x1D;
   }
```

```
//In case the crc MSB is 0.
   else
//"crc" advances one position (this step is to ensure that the XOR operation is only
//done when the generator polynomial is aligned with a MSB of the message that is "1".
    crc <<= 1;
   }
  }

//Return the inverted "crc" remainder("~" is the invertion operator). An alternative
//to the "~" operator would be a XOR operation between "crc" and a 0xFF polynomial.
 return(~crc);
}
```

Example 2:

The function that generates the CRC:

```
//"message" is the data transfer for which a CRC has to be calculated.
//A typical "message" consists of 2 bytes for the command word plus 2 bytes for the
//data word plus 2 bytes for the safety word.
//"Bytelength" is the number of bytes in the "message". A typical "message" has 6
//bytes.
//*Table CRC is the pointer to the look-up table (LUT)
unsigned char CRC8(unsigned char *message, unsigned char Bytelength, unsigned char
* TableCRC)
{

//"crc" defined as the 8-bits that will be generated through the message till the
//final crc is generated. In the example above this are the blue lines out of the
//XOR operation.
 unsigned char crc;

//"Byteidx" is a counter to compare the bytes used for the CRC calculation and
//"Bytelength".
 unsigned char Byteid;

//Initially the CRC remainder has to be set with the original seed (0xFF for the
//TLE5012B).
 crc = 0xFF;

//For all the bytes of the message.
 for(Byteidx=0; Byteidx<Bytelength; Byteidx++)
 {
//"crc" is the value in the look-up table TableCRC[x] at the position "x".
//The position "x" is determined as the XOR operation between the previous "crc" and
//the next byte of the "message".
//"^" is the XOR operator.
  crc = TableCRC[crc ^ *(message+Byteidx)];
 }

//Return the inverted "crc" remainder("~" is the invertion operator). An alternative
//to the "~" operator would be a XOR operation between "crc" and a 0xFF polynomial.
```

```
 return(~crc);
}
```

The look-up table -which depends on the CRC generator polynomial- required for the TLE5012B is as follows:

```
//Look-up table (LUT) for the TLE5012B with generator polynomial 100011101 (0x11D).
//As this table will be checked byte by byte, each byte has 256 possible values (2^8)
//for its CRC calculation with the given generator polynomial.
unsigned char TableCRC[256]
{

//The "crc" of the position [1] (result from operation [crc ^*(message+Byteidx)])
//is 0x00 -> 0x00 XOR 0x11D = 0x00 (1 byte).
 0x00,
//The "crc" of the position [2] is 0x1D -> 0x01 XOR 0x11D = 0x1D (1 byte).
 0x1D,
//The "crc" of the position [3] is 0x3A -> 0x02 XOR 0x11D = 0x3A (1 byte).
 0x3A,
//For all the rest of the cases.
 0x27, 0x74, 0x69, 0x4E, 0x53, 0xE8, 0xF5, 0xD2, 0xCF, 0x9C, 0x81, 0xA6, 0xBB, 0xCD,
 0xD0, 0xF7, 0xEA, 0xB9, 0xA4, 0x83, 0x9E, 0x25, 0x38, 0x1F, 0x02, 0x51, 0x4C, 0x6B,
 0x76, 0x87, 0x9A, 0xBD, 0xA0, 0xF3, 0xEE, 0xC9, 0xD4, 0x6F, 0x72, 0x55, 0x48, 0x1B,
 0x06, 0x21, 0x3C, 0x4A, 0x57, 0x70, 0x6D, 0x3E, 0x23, 0x04, 0x19, 0xA2, 0xBF, 0x98,
 0x85, 0xD6, 0xCB, 0xEC, 0xF1, 0x13, 0x0E, 0x29, 0x34, 0x67, 0x7A, 0x5D, 0x40, 0xFB,
 0xE6, 0xC1, 0xDC, 0x8F, 0x92, 0xB5, 0xA8, 0xDE, 0xC3, 0xE4, 0xF9, 0xAA, 0xB7, 0x90,
 0x8D, 0x36, 0x2B, 0x0C, 0x11, 0x42, 0x5F, 0x78, 0x65, 0x94, 0x89, 0xAE, 0xB3, 0xE0,
 0xFD, 0xDA, 0xC7, 0x7C, 0x61, 0x46, 0x5B, 0x08, 0x15, 0x32, 0x2F, 0x59, 0x44, 0x63,
 0x7E, 0x2D, 0x30, 0x17, 0x0A, 0xB1, 0xAC, 0x8B, 0x96, 0xC5, 0xD8, 0xFF, 0xE2, 0x26,
 0x3B, 0x1C, 0x01, 0x52, 0x4F, 0x68, 0x75, 0xCE, 0xD3, 0xF4, 0xE9, 0xBA, 0xA7, 0x80,
 0x9D, 0xEB, 0xF6, 0xD1, 0xCC, 0x9F, 0x82, 0xA5, 0xB8, 0x03, 0x1E, 0x39, 0x24, 0x77,
 0x6A, 0x4D, 0x50, 0xA1, 0xBC, 0x9B, 0x86, 0xD5, 0xC8, 0xEF, 0xF2, 0x49, 0x54, 0x73,
 0x6E, 0x3D, 0x20, 0x07, 0x1A, 0x6C, 0x71, 0x56, 0x4B, 0x18, 0x05, 0x22, 0x3F, 0x84,
 0x99, 0xBE, 0xA3, 0xF0, 0xED, 0xCA, 0xD7, 0x35, 0x28, 0x0F, 0x12, 0x41, 0x5C, 0x7B,
 0x66, 0xDD, 0xC0, 0xE7, 0xFA, 0xA9, 0xB4, 0x93, 0x8E, 0xF8, 0xE5, 0xC2, 0xDF, 0x8C,
 0x91, 0xB6, 0xAB, 0x10, 0x0D, 0x2A, 0x37, 0x64, 0x79, 0x5E, 0x43, 0xB2, 0xAF, 0x88,
 0x95, 0xC6, 0xDB, 0xFC, 0xE1, 0x5A, 0x47, 0x60, 0x7D, 0x2E, 0x33, 0x14, 0x09, 0x7F,
 0x62, 0x45, 0x58, 0x0B, 0x16, 0x31, 0x2C, 0x97, 0x8A, 0xAD, 0xB0, 0xE3, 0xFe,
//The "crc" of the position [255] is 0xD9 -> 0xFE XOR 0x11D = 0xD9 (1 byte).
 0xD9,
//The "crc" of the position [256] is 0xC4 -> 0xFF XOR 0x11D = 0xC4 (1 byte).
 0xC4
}
```

The following code does not need to be implemented since the look-up table is already provided above. But for general interest the following code would be used to generate the look-up table independently of which generator polynomial is used. This code can also be used to ensure that the values in the look-up table are correctly generated/copied to the application.

```
//Generation of a look-up table (LUT)
void BuildCRCTable(unsigned int polynomial, unsigned char * crcTable)
{

//"ReducedPoly" is the generator polynomial
```

```
 unsigned char ReducedPoly;
 unsigned int message;
 unsigned char crc;
 unsigned bitindex;

//Only 8 bits are taken
 ReducedPoly = (unsigned char)(polynomial&0x00FF);

//For all the possible "message" combinations
 for (message=0; message <= 0xFF; message++)
 {
  crc=(unsigned char)message;
//For all the bits of the byte.
  for(Bitindex=0; Bitindex<8; Bitindex++)
  {
//Calculation of the CRC
   if((crc&0x80)!=0)
   {
    crc <<= 1;
    crc ^= ReducedPoly;
   }
   else
    crc <<=1;
  }
//The value out of the CRC calculation for a certain "message" is saved in the
//position of the "message".
 *(crcTable+message) = crc;
 }
}
```

Disclaimer

The CRC generation software code provided above shall be used as guidance to the developer of solutions with the TLE5012B. Infineon is not responsible for malfunctioning of the code provided above. This code was used with an Infineon's microcontroller XC878.

- The CRC generation software code is only provided as a hint for the implementation or the use of the Infineon Technologies components and shall not be regarded as any description or warrant of a certain functionalities, conditions or quality of the Infineon Technologies component(s).
- All statements contained in this code, including recommendation or suggestion or methodology, are to be verified by the user before implementation or use, as operating conditions and environmental factors may differ. The recipient of this code must verify any function described herein in the real application.
- Infineon Technologies hereby disclaims any and all warranties and liabilities of any kint (including without limitation warranties of non-infringement of intellectual property rights of any third party) with respect to any and all code given in this document.

5.2.5 Angle Calculation with X-raw and Y-raw values

The TLE5012B's COordinate Rotation DIgital Computer (CORDIC) contains the trigonometric function for angle calculation. The angle value can be accessed reading the ANG_VAL register.

For safety checks and other purposes, it is also possible to calculate the angle value in a microcontroller by reading the X-raw and Y-raw values from the TLE5012B. The raw values have to be compensated by either calculating the offset, amplitude and phase parameters or by reading the registers which contain the pre-calibrated values. The second case is recommended in cases where either the application does not turn full rotations (to calculate the compensation parameters the whole sine and cosine signals are required) or it rotates at high speeds (enough data has to be read to ensure that the maximum and minimum values of the sine and cosine are read).

5.2.5.1 Angle Calculation using pre-calibrated compensation values

For the angle calculation using pre-calibrated compensation values the following values have to be read from the registers:

- X-raw value (ADC_X register, address 10_H)
- Y-raw value (ADC_Y register, address 11_H)
- T-raw value (T_RAW register, address 15_H)
- T25O value (T25O register, address 30_H)
- TCO_X_T value (MOD_4 register, address $0E_H$)
- TCO_Y_T value (TCO_Y register, address $0F_H$)
- X_OFFSET value (Offset X register, address $0A_H$)
- Y_OFFSET value (Offset Y register, address $0B_H$)
- SYNCH value (SYNCH register, address $0C_H$)
- ORTHO value (IFAB register, address $0D_H$)
- ANG_BASE value (MOD_3 register, address 09_H)

The values T25O, TCO_X_T, TCO_Y_T, X_OFFSET, Y_OFFSET, SYNCH, ORTHO and ANG_BASE are values specific for each device and constant (if autocalibration disabled). Therefore these values are required to be read only once and saved to the microcontroller for re-use.

Refer to **Chapter 6.2** for the description of the listed registers. These values have to be read with autocalibration disabled.

X-raw and Y-raw values compensation

To increase the accuracy, the temperature-dependent offset drift can be compensated. The offset values O_X and O_Y can be described by **Equation (5.1)**:

$$\begin{aligned} O_X &= X\_OFFSET + TCO\_X\_T * (T\_RAW - T25O - 439) \\ O_Y &= Y\_OFFSET + TCO\_Y\_T * (T\_RAW - T25O - 439) \end{aligned} \tag{5.1}$$

T25O is a 7 bit register that has to be subtracted from the 10 bit T_RAW register. No shifts are required in this operation, since the higher order bits of the T_RAW register are used to represent a wider range of values and not a different resolution.

TCO_X_T and TCO_Y_T have 7 bits only and are multiplied with a 10 bit value. Therefore the result of the multiplication has to be limited to the 10 MSBs (arithmetic shift by 7, if supported by compiler/architecture or signed division by 128). In the last step of **Equation (5.1)**, the 10 bit value for the temperature-dependent offset has to be added to the 12 bit X_OFFSET and Y_OFFSET.

After the X and Y values are read out, the temperature-corrected offset value must be subtracted:

$$X_1 = X\_RAW - O_X$$
$$Y_1 = Y\_RAW - O_Y \tag{5.2}$$

X_RAW and Y_RAW are 16 bit values at which a 12 bit value is subtracted. Offsets are in the 12 bit range since the values are smaller than the whole X_RAW and Y_RAW range.

Next, the Y value is normalized with the amplitude synchronicity:

$$X_2 = X_1$$
$$Y_2 = Y_1 * SYNCH \tag{5.3}$$

While Y_1 is a 16 bit absolute value, SYNCH is a 12 bit relative factor (amplitude synchronicity is a relative correction between the amplitude of the X-raw and Y-raw values). To convert SYNCH to absolute factor a normalized one has to be added, this corresponds to add a value of 16,384 (2^14). After the multiplication Y_2 will be a 28 bit value (16 bit from Y_1 and 14 bit from the SYNCH absolute factor which includes the added one), therefore it has to be shifted to have the 16 MSBs only (arithmetic shift by 14, if supported by compiler/architecture or signed division by 16384).

The influence of the non-orthogonality can be compensated using the following equation, in which only the Y value must be corrected:

$$X_3 = X_2$$
$$Y_3 = \frac{Y_2 - X_2 * \sin(-ORTHO)}{\cos(-ORTHO)} \tag{5.4}$$

As described in the IFAB register (address $0D_H$), the ORTHO bits represent a value between -11.2500° and 11.2445° with a 12 bit resolution. Y_3 should finally be limited to 16 bits.

Angle calculation

After correction of all errors, the resulting angle can be calculated using the arctan function and subtracting the angle base as shown in **Equation (5.5)**:

$$\alpha = \arctan\left(\frac{Y_3}{X_3}\right) - ANG\_BASE \tag{5.5}$$

To correctly resolve the arctan function in 360°, the microcontroller should implement the function *arctan2(Y_3/X_3)*. ANG_BASE is a 12 bit register.

Small deltas from the ANG_VAL register may depend on the speed of application.

Figure 5-10 shows the flow chart of angle calculation from the X-raw and Y-raw values as described above.

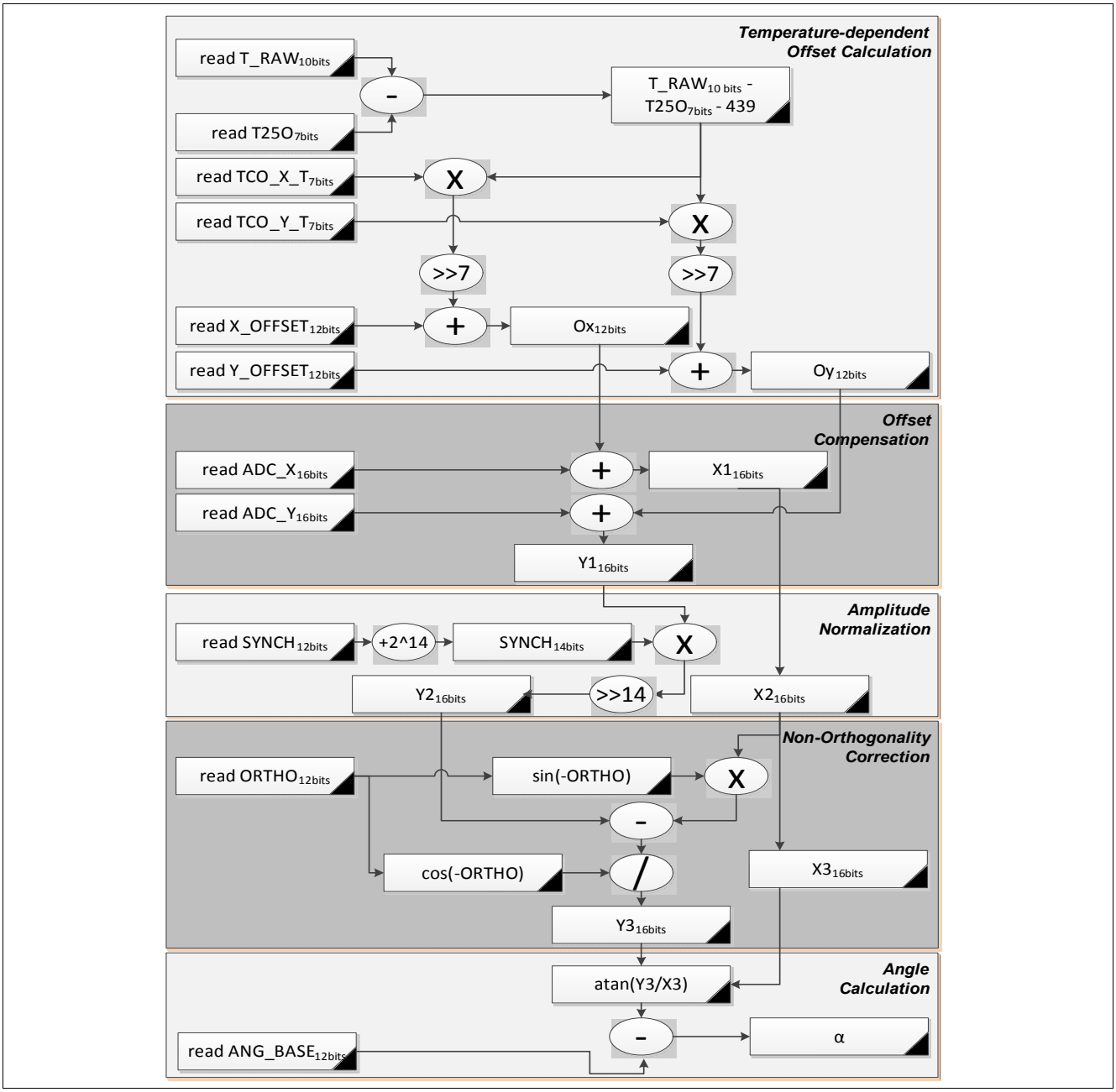

Figure 5-10 Flow-Chart of Angle Calculation from the X-raw and Y-raw values

5.2.5.2 Angle Calculation with end-of-line calibration values

The TLE5012B already has pre-calibrated compensation parameters which can be used to calculate the angle value (see **Chapter 5.2.5.1**). Own compensation parameters can also be calculated end-of-line if desired. In that case check the **Application Note TLE5009 Calibration**.

5.3 Pulse Width Modulation Interface

The Pulse Width Modulation (PWM) interface can be selected via SSC (IF_MD = ‘01’) in the register MOD_4.

The PWM update rate can be programmed within the register $0E_H$ (IFAB_RES) in four possible steps with 12-bit resolution (including diagnostics):

- ~0.25 kHz
- ~0.5 kHz
- ~1.0 kHz
- ~2.0 kHz

PWM uses a square wave with constant frequency whose duty cycle is modulated according to the last measured angle value (AVAL register).

Figure 5-11 shows the principal behavior of a PWM with various duty cycles and the definition of timing values. The duty cycle of a PWM is defined by the following general formulas:

$$Duty\ Cycle = \frac{t_{on}}{t_{PWM}}$$

$$t_{PWM} = t_{on} + t_{off}$$

$$f_{PWM} = \frac{1}{t_{PWM}} \tag{5.6}$$

The duty cycle range between 0 - 6.25% and 93.75 - 100% is used only for diagnostic purposes. In case the sensor detects an error, the corresponding error information will be transmitted by the PWM duty cycle, either in the lower (0 - 6.25%) or upper (93.75 - 100%) diagnostic range, depending on the kind of error (see “Output duty cycle range” in **Table 5-7**). As long as a fault is present, the error information will be transmitted in PWM frames. This diagnostic function can be disabled via the MOD_4 register (see **Chapter 6.2**).

Sensors with preset PWM are available as TLE5012B E5xxx. The register settings for these sensors can be found in **Chapter 6.2**.

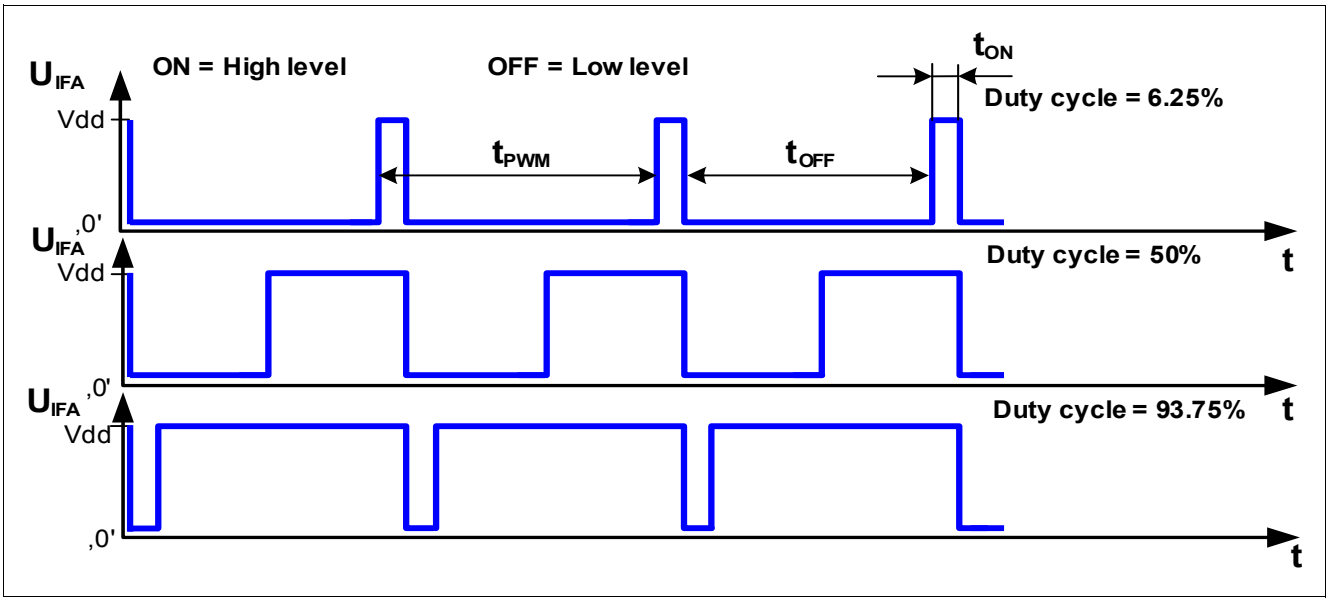

Figure 5-11 Typical example of a PWM signal

Table 5-7 PWM interface

Parameter	Symbol	Values			Unit	Note / Test Condition
		Min.	Typ.	Max.		
PWM output frequencies (Selectable by IFAB_RES)	f_{PWM1}	232	244	262	Hz	1)
	f_{PWM2}	464	488	525	Hz	1)
	f_{PWM3}	929	977	1050	Hz	1)
	f_{PWM4}	1855	1953	2099	Hz	1)
Output duty cycle range	DY_{PWM}	6.25		93.75	%	Absolute angle[1)]
			2		%	Electrical Error (S_RST; S_VR)[1)2)]
			98		%	System error (S_FUSE; S_OV; S_XYOL; S_MAGOL; S_ADCT)[1)]
		0		1	%	Short to GND[1)]
		99		100	%	Short to V_{DD}, power loss[1)]

1) Not subject to production test - verified by design/characterization

2) Both hardware and software resets will generate an Electrical Error duty cycle for the first PWM pulse after the reset (S_RST). After readout, S_RST bit will be set to “0”, so the second PWM pulse will indicate an angle.

The PWM frequency is derived from the digital clock via

$$f_{PWM} = \frac{f_{DIG} * 2^{IFAB\_RES}}{24 * 4096} \tag{5.7}$$

The min/max values given in **Table 5-7** take into account the internal digital clock variation specified in **TLE5012B Data Sheet**. If external clock is used, the variation of the PWM frequency can be derived from the variation of the external clock using **Equation (5.7)**.

Pulse length convertion to angle value

The length of the duty cycle represents the angle value. Whatever the absolute angle value is, the t_{on} time depends on the angle value calculated by the TLE5012B with resolution up to 0.100°. The 0.100° resolution is due to the fact that with 12bit resolution (4096 steps) 100% of the duty cycle can be mapped, but only 87.5% of the duty cycle translates to angle values. This means that the 360° degees must be mapped with only 3584 steps (87.5%*4096), so effective resolution is 0.100°.

The angle value can be measured with the following formula, where t_{ON} is the length of the pulse in seconds and f_{PWM} is the frequency selected:

$$Angle[°] = \left(t_{ON} - 6.25\% * \frac{1}{f_{PWM}} \right) * \frac{360°}{87.5\% * \frac{1}{f_{PWM}}} \tag{5.8}$$

The frequency for the PWM interface can be selected via the register MOD_4 (IFAB_RES bits) as described in **Chapter 6.2.1**. See **Chapter 7** for the PWM derivates with the default frequencies.

A t_{ON} of more than 93.75% duty cycle would indicate an error as described in **Table 5-7**.

5.4 Short PWM Code (SPC)

The Short PWM Code (SPC) is a synchronized data transmission based on the SENT protocol (Single Edge Nibble Transmission) defined by SAE J2716. As opposed to SENT, which implies a continuous transmission of data, the SPC protocoll transmits data only after receiving a specific trigger pulse from the microcontroller. The required length of the trigger pulse depends on the sensor number, which is configurable. Thereby, SPC allows the operation of up to four sensors on one bus line.

SPC enables the use of enhanced protocol functionality due to the ability to select between various sensor slaves (ID selection). The slave number (S_NR) can be given by the external circuit of SCK and IFC pin. In case of V_{DD} on SCK, the S_NR[0] can be set to 1 and in the case of GND on SCK the S_NR[0] is equal to 0. S_NR[1] can be adjusted in the same way by the IFC pin. Only one data line to the slaves is necessary, as the length of the trigger nibble will awake one or the other slaves, as explained in the next paragraph.

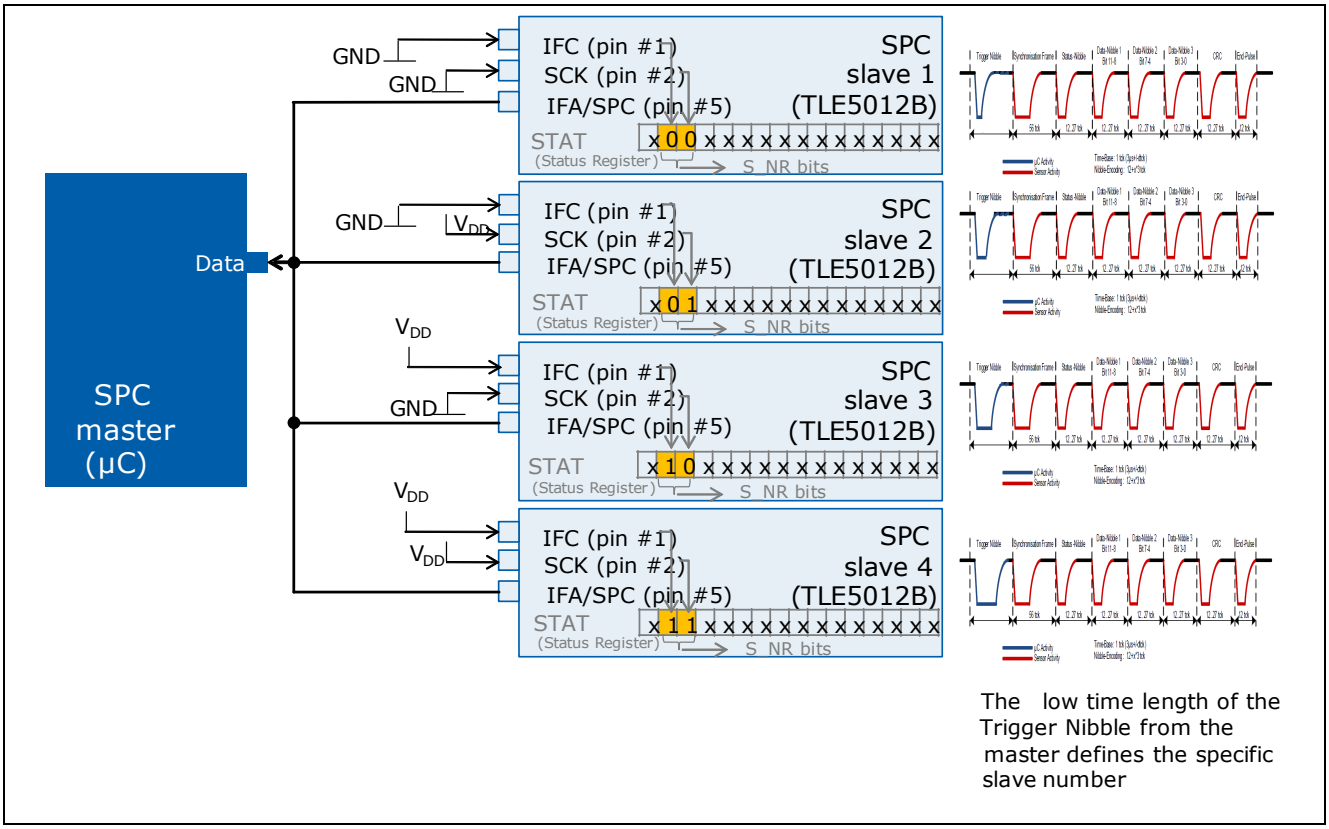

Figure 5-12 Example of four slaves connected to a bus with one master with SPC interface

As in SENT, the time between two consecutive falling edges defines the value of a 4-bit nibble, thus representing numbers between 0 and 15. The transmission time therefore depends on the transmitted data values. The single edge is defined by a 3 Unit Time (UT, see **Chapter 5.4.1**) low pulse on the output, followed by the high time defined in the protocol (nominal values, may vary depending on the tolerance of the internal oscillator and the influence of external circuitry). All values are multiples of a unit time frame concept. A transfer consists of the following parts (**Figure 5-13**):

- A trigger pulse by the master, which initiates the data transmission
- A synchronization period of 56 UT (in parallel, a new sample is calculated)
- A status nibble of 12-27 UT
- Between 3 and 6 data nibbles of 12-27 UT
- A CRC nibble of 12-27 UT
- An end pulse to terminate the SPC transmission

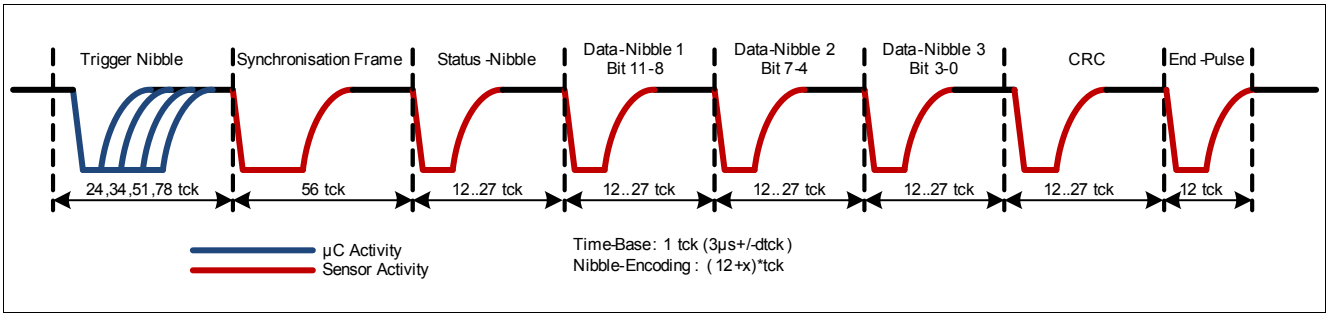

Figure 5-13 SPC frame example

The CRC checksum includes the status nibble and the data nibbles. It can be used to check the validity of the decoded data. The sensor is available for the next trigger pulse 90µs after the falling edge of the end pulse (see **Figure 5-14**).

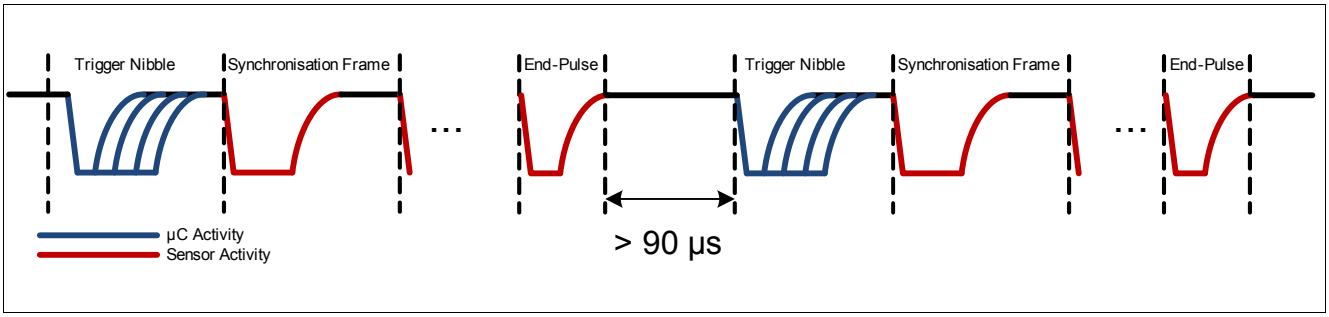

Figure 5-14 SPC pause timing diagram

In SPC mode, the sensor does not continuously calculate an angle from the raw data. Instead, the angle calculation starts after the recognized trigger nibble from the master in order to minimize timing jitter. In this mode, the AVAL register, which stores the angle value and can be read via SSC, contains the angle which was calculated after the last SPC trigger nibble.This means that in any case, to update the registers and read the data via SSC, a trigger nibble has to be previously generated.

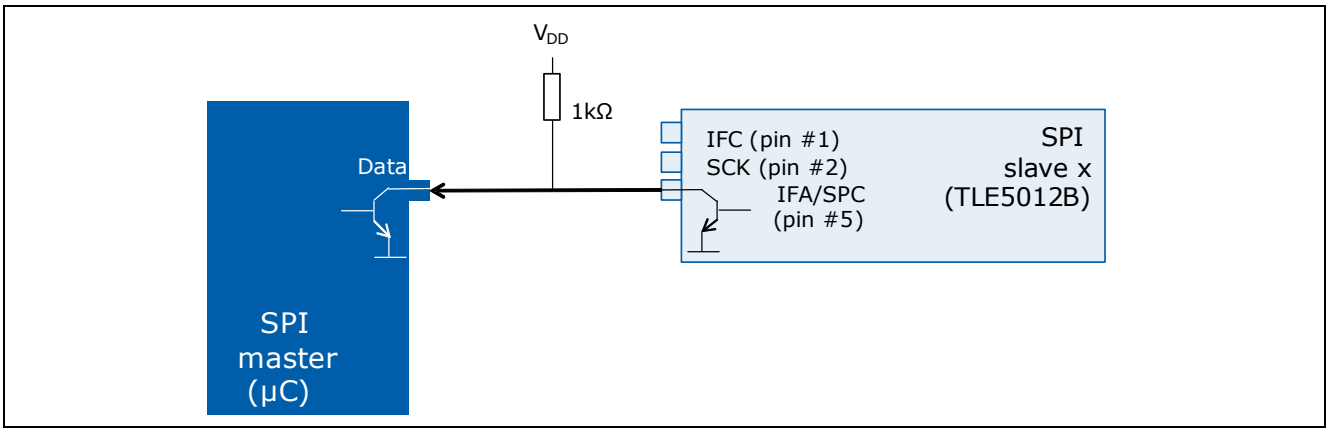

Figure 5-15 SPC configuration in open drain mode

In parallel to SPC, the SSC interface can be used for individual configuration. The number of transmitted SPC nibbles can be changed to customize the amount of information sent by the sensor. The frame contains a 16-bit angle value and an 8-bit temperature value in the full configuration (**Table 5-8**).

Sensors with preset SPC are available as TLE5012B E9000. The register settings for these sensors can be found in the **Chapter 7**.

Table 5-8 Frame configuration

Frame type	IFAB_RES	Data nibbles
12-bit angle	00	3 nibbles
16-bit angle	01	4 nibbles
12-bit angle, 8-bit temperature	10	5 nibbles
16-bit angle, 8-bit temperature	11	6 nibbles

The status nibble, which is sent with each SPC data frame, provides an error indication similar to the Safety Word of the SSC protocol. In case the sensor detects an error, the corresponding error bit in the Status register is set and either the bit SYS_ERR or the bit ELEC_ERR of the status nibble will be “high”, depending on the kind of error (see **Table 5-9**). As long as a fault is present, the error information will be transmitted in SPC frames. Any fault will be communicated at least once by the SPC frame (even if the fault happened and disappeared before the trigger nibble).

Table 5-9 Structure of status nibble

Name	Bits	Description
SYS_ERR	[3]	Indication of system error (S_FUSE, S_OV, S_XYOL, S_MAGOL, S_ADCT) 0: No system error 1: System error occurred
ELEC_ERR	[2]	Indication of electrical error (S_RST, S_VR) 0: No electrical error 1: Electrical error occurred Both hardware and software resets will set this bit at “1” for the first status nibble after the reset (S_RST).
S_NR	[1]	Slave number bit 1 (level on IFC)
	[0]	Slave number bit 0 (level on SCK)

5.4.1 Unit Time Setup

The basic SPC protocol unit time granularity is defined as 3 µs. Every timing is a multiple of this basic time unit.To achieve more flexibility, trimming of the unit time can be done within IFAB_HYST. This enables a setup of different unit times.

Table 5-10 Predivider setting

Parameter	Symbol	Values			Unit	Note / Test Condition
		Min.	Typ.	Max.		
Unit time	t_{Unit}		3.0		µs	IFAB_HYST = 00[1)]
			2.5			IFAB_HYST = 01[1)]
			2.0			IFAB_HYST = 10[1)]
			1.5			IFAB_HYST = 11[1)]

1) Not subject to production test - verified by design/characterization

5.4.2 Master Trigger Pulse Requirements

An SPC transmission is initiated by a master trigger pulse on the IFA pin. To detect a low-level on the IFA pin, the voltage must be below a threshold V_{th}. The sensor detects that the IFA line has been released as soon as V_{th} is crossed. **Figure 5-16** shows the timing definitions for the master pulse. The master low time t_{mlow} as well as the total trigger time t_{mtr} are given in **Table 5-11**.

If the master low time exceeds the maximum low time, the sensor does not respond and is available for a next triggering 30 µs after the master pulse crosses V_{thr}. $t_{md,tot}$ is the delay between internal triggering of the falling edge in the sensor and the triggering of the ECU.

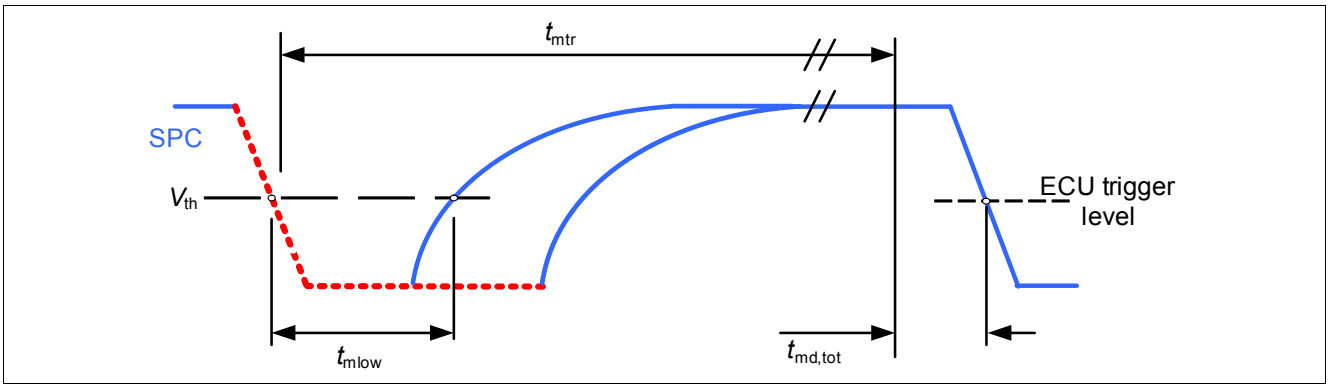

Figure 5-16 SPC Master pulse timing

Table 5-11 Master pulse parameters

Parameter	Symbol	Values			Unit	Note / Test Condition
		Min.	Typ.	Max.		
Threshold	V_{th}		50		% of V_{DD}	1)
Threshold hysteresis	V_{thhyst}		8		% of V_{DD}	V_{DD} = 5 V 1)
			3			V_{DD} = 3 V 1)
Total trigger time	t_{mtr}		90		UT	SPC_Trigger = 0; 1)2)
			t_{mlow} +12		UT	SPC_Trigger = 1 1)
Master low time	t_{mlow}	8	12	14	UT	S_NR =00 1)
		16	22	27		S_NR =01 1)
		29	39	48		S_NR =10 1)
		50	66	81		S_NR =11 1)
Master delay time	$t_{md,tot}$		5.8		µs	1)

1) Not subject to production test - verified by design/characterization

2) Trigger time in the sensor is fixed to the number of units specified in the “typ.” column, but the effective trigger time varies due to the sensor’s clock variation

Total trigger time

The SPC_Trigger is set to 0 by default. For a variable-length SPC Trigger Nibble -and therefore an overall shorter SPC Frame- the SPC_Trigger bit can be set to 1 via the SSC interface. The SPC_Trigger bit is the second MSB of the HSM_PLP bits of the MOD_4 register (address $0E_H$). Check **Chapter 6.2** for further details.

5.4.3 Checksum Nibble Details

The checksum nibble is a 4-bit CRC of the data nibbles including the status nibble. The CRC is calculated using the polynomial $x^4+x^3+x^2+1$ with a seed value of 0101. The remainder after the last data nibble is used are transferred as CRC.

CRC calculation example with SPC interface:

The following example shows the CRC generation for a typical SPC frame with three data nibbles (default setting). The status nibble is 0000_B as there are no errors and the slave number is the 00_B (IFC and SCK pin connected to ground as shown in the application circuits chapter). The following three data nibbles provide the angle value.

At the beginning the CRC is set at 0000_B (see **Figure 5-18**, line 1). The first step to generate the CRC consists in a XOR logical operation (line 3) between the status nibble (line 1) and the seed value 0101_B (line 2). Align the generator polynomial (line 4) to the non-zero MSB of the dataset out of the first step (line 3) and calculate another XOR (line 5).

$$x^4 + x^3 + x^2 + 1$$

$$11101$$

Figure 5-17 TLE5012B's CRC generator polynomial for the SPC interface

From this point onwards, reiterative XOR logical operations between the data (result of the previous operation) and the generator polynomial are done till the remaining bits are equal or smaller than $0x0F_H$ (only 4 bits left).

		Status-Nibble				Data-Nibble 1				Data-Nibble 2				Data-Nibble 3				CRC			
		MSB			LSB	MSB			LSB	MSB			LSB	MSB			LSB	MSB			LSB
1		0	0	0	0	0	1	1	1	1	0	0	1	0	0	1	1	0	0	0	0
2	Seed	0	1	0	1																
3	XOR	0	1	0	1																
4	Generator polynomial		1	1	1	0	1														
5	XOR		0	1	0	0	0														
6	Generator polynomial			1	1	1	0	1													
7	XOR			0	1	1	0	0													
8	Generator polynomial				1	1	1	0	1												
9	XOR				0	0	1	0	0												
10	Generator polynomial						1	1	1	0	1										
11	XOR						0	1	1	1	1										
12	Generator polynomial							1	1	1	0	1									
13	XOR							0	0	0	1	1									
14	Generator polynomial										1	1	1	0	1						
15	XOR										0	0	0	0	1						
16	Generator polynomial														1	1	1	0	1		
17	XOR														0	0	0	0	1		
18	Remainder																	0	1	0	0
20																		4_D			

Figure 5-18 CRC generation example with SPC interface

CRC generation software code example

```
//“message” is the data transfer for which a CRC has to be calculated.
//A typical “message” consists of the status nibble, three data nibbles and the CRC
//nibble (the trigger nibble and the synchronisation nibble are not part of the CRC).
//“Length” is the number of nibbles in the “message”. A typical “message” has 5
//nibbles (the trigger nible and the synchronization nibble are not part of the CRC).
unsigned char CRC(unsigned char *message, unsigned char Length)
{

//“crc” defined as the 4-bits that will be generated through the message till the
//final “crc” is generated. In the example above this are the blue lines out of the
//XOR operation.
 unsigned char crc;

//“Numnibbles” is a counter to compare the bits used for the CRC calculation and
//“Length”.
 unsigned char Numnibbles, bitdata;

//Initially the CRC remainder has to be set with the original seed (0x05 for the
//TLE5012B).
 crc = 0x05;

//For all the nibbles of the message.
 for(Numnibbles=0; Numnibbles<Length; Numnibbles++)
 {
//“crc” is calculated as the XOR operation from the previous “crc” and the “message”.
//“^” is the XOR operator.
  crc ^= message[Numnibbles];
//For each bit position in a 4-bit nibble
  for(bitdata=0; bitdata<4; bitdata++)
  {
//If the MSB of the “crc” is 1 (with the &0x80 mask we get the MSB of the crc).
   if((crc&0x08)!=0)
   {
//“crc” advances on position (“crc” is moved left 1 bit: the MSB is deleted since it
//will be cancelled out with the first one of the generator polynomial and a new bit
//from the “message” is taken as LSB.)
    crc <<=1;
//“crc” is calculated as the XOR operation from the previous “crc” and the generator
//polynomial (0x0D for TLE5012B). Be aware that here the x4 bit is not taken since
//the MSB of the “crc” already has been deleted in the previous step.
    crc ^= 0x0D;
   }
//In case the “crc” MSB is 0
   else
//“crc” advances one position (this step is to ensure that the XOR operation is only
//done when the generator polynomial is aligned with a MSB of the message that is “1”.
    crc <<= 1;
   }
  }
```

```
//Return the "crc" remainder. The &0x0F mask is a safety check to ensure four LSBs
//only and rest 0's.
 return(crc&0x0F);
}
```

Disclaimer

The CRC generation software code provided above shall be used as guidance to the developer of solutions with the TLE5012B. Infineon is not responsible for malfunctioning of the code provided above. This code was used with an Infineon's microcontroller XC878.

- The CRC generation software code is only provided as a hint for the implementation or the use of the Infineon Technologies components and shall not be regarded as any description or warrant of a certain functionalities, conditions or quality of the Infineon Technologies component(s).
- All statements contained in this code, including recommendation or suggestion or methodology, are to be verified by the user before implementation or use, as operating conditions and environmental factors may differ. The recipient of this code must verify any function described herein in the real application.
- Infineon Technologies hereby disclaims any and all warranties and liabilities of any kint (including without limitation warranties of non-infringement of intellectual property rights of any third party) with respect to any and all code given in this document.

5.5 Hall Switch Mode (HSM)

The **H**all **S**witch **M**ode (**HSM**) within the TLE5012B makes it possible to emulate the output of 3 Hall switches. Hall switches are often used in electrical commutated motors to determine the rotor position. With these 3 output signals, the motor will be commutated in the right way. Depending on which pole pairs of the rotor are used, various electrical periods have to be controlled. This is selectable within $0E_H$ (HSM_PLP). **Figure 5-19** depicts the three output signals with the relationship between electrical angle and mechanical angle. The mechanical 0° point is always used as reference.

The HSM is generally used with push-pull output, but it can be changed to open-drain within the register IFAB_OD.

Sensors with preset HSM are available as TLE5012B E3xxx. The register settings for these sensors can be found in the **Chapter 6.2**.

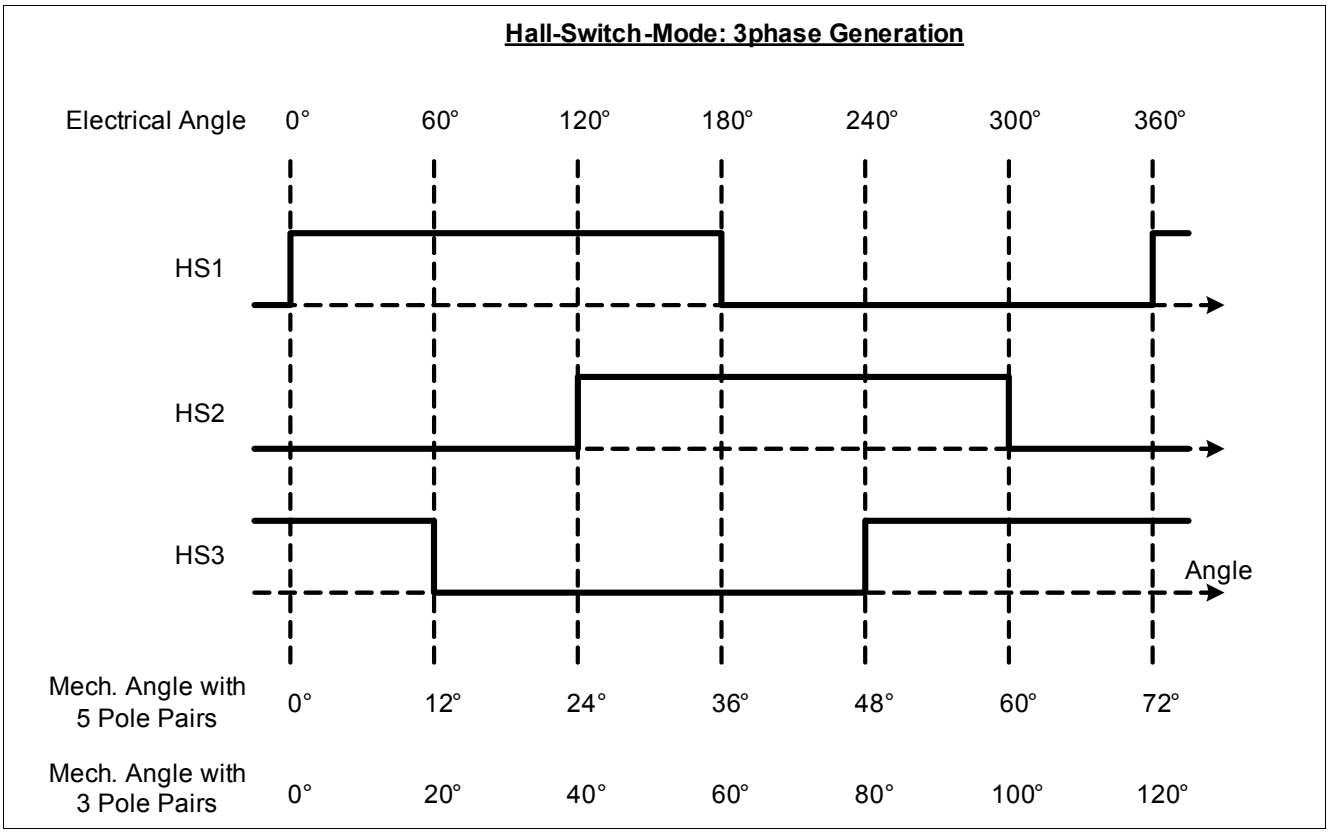

Figure 5-19 Hall Switch Mode

The HSM Interface can be selected via SSC (IF_MD = 010).

Table 5-12 Hall Switch Mode

Parameter	Symbol	Values			Unit	Note / Test Condition
		Min.	Typ.	Max.		
Rotation speed	n			10000	rpm	Mechanical[2)]

Table 5-12 Hall Switch Mode (cont'd)

Parameter	Symbol	Values			Unit	Note / Test Condition
		Min.	Typ.	Max.		
Electrical angle accuracy	α_{elect}		0.6	1	°	1 pole pair with autocalibration[1)2)]
			1.2	2	°	2 pole pairs with autocal.[1)2)]
			1.8	3	°	3 pole pairs with autocal.[1)2)]
			2.4	4	°	4 pole pairs with autocal.[1)2)]
			3.0	5	°	5 pole pairs with autocal.[1)2)]
			3.6	6	°	6 pole pairs with autocal.[1)2)]
			4.2	7	°	7 pole pairs with autocal.[1)2)]
			4.8	8	°	8 pole pairs with autocal.[1)2)]
			5.4	9	°	9 pole pairs with autocal.[1)2)]
			6.0	10	°	10 pole pairs with autocal.[1)2)]
			6.6	11	°	11 pole pairs with autocal.[1)2)]
			7.2	12	°	12 pole pairs with autocal.[1)2)]
			7.8	13	°	13 pole pairs with autocal.[1)2)]
			8.4	14	°	14 pole pairs with autocal.[1)2)]
			9.0	15	°	15 pole pairs with autocal.[1)2)]
			9.6	16	°	16 pole pairs with autocal.[1)2)]
Mechanical angle switching hysteresis	$\alpha_{HShystm}$	0		0.703	°	Selectable by IFAB_HYST[2)3)4)]

Table 5-12 Hall Switch Mode (cont'd)

Parameter	Symbol	Values			Unit	Note / Test Condition
		Min.	Typ.	Max.		
Electrical angle switching hysteresis[5)]	$\alpha_{HShystel}$		0.70		°	1 pole pair; IFAB_HYST=11[1)2)]
			1.41		°	2 pole pairs; IFAB_HYST=11[1)2)]
			2.11		°	3 pole pairs; IFAB_HYST=11[1)2)]
			2.81		°	4 pole pairs; IFAB_HYST=11[1)2)]
			3.52		°	5 pole pairs; IFAB_HYST=11[1)2)]
			4.22		°	6 pole pairs; IFAB_HYST=11[1)2)]
			4.92		°	7 pole pairs; IFAB_HYST=11[1)2)]
			5.62		°	8 pole pairs; IFAB_HYST=11[1)2)]
			6.33		°	9 pole pairs; IFAB_HYST=11[1)2)]
			7.03		°	10 pole pairs; IFAB_HYST=11[1)2)]
			7.73		°	11 pole pairs; IFAB_HYST=11[1)2)]
			8.44		°	12 pole pairs; IFAB_HYST=11[1)2)]
			9.14		°	13 pole pairs; IFAB_HYST=11[1)2)]
			9.84		°	14 pole pairs; IFAB_HYST=11[1)2)]
			10.55		°	15 pole pairs; IFAB_HYST=11[1)2)]
			11.25		°	16 pole pairs; IFAB_HYST=11[1)2)]
Fall time	t_{HSfall}		0.02	1	µs	R_L = 2.2kΩ; C_L < 50pF[2)]
Rise time	t_{HSrise}		0.4	1	µs	R_L = 2.2kΩ; C_L < 50pF[2)]

1) Depends on internal oscillator frequency variation (see Data Sheet)
2) Not subject to production test - verified by design/characterization
3) GMR hysteresis not considered
4) Minimum hysteresis without switching
5) The hysteresis has to be considered only at change of rotation direction

To avoid switching due to mechanical vibrations of the rotor, an artificial hysteresis is recommended (**Figure 5-20**).

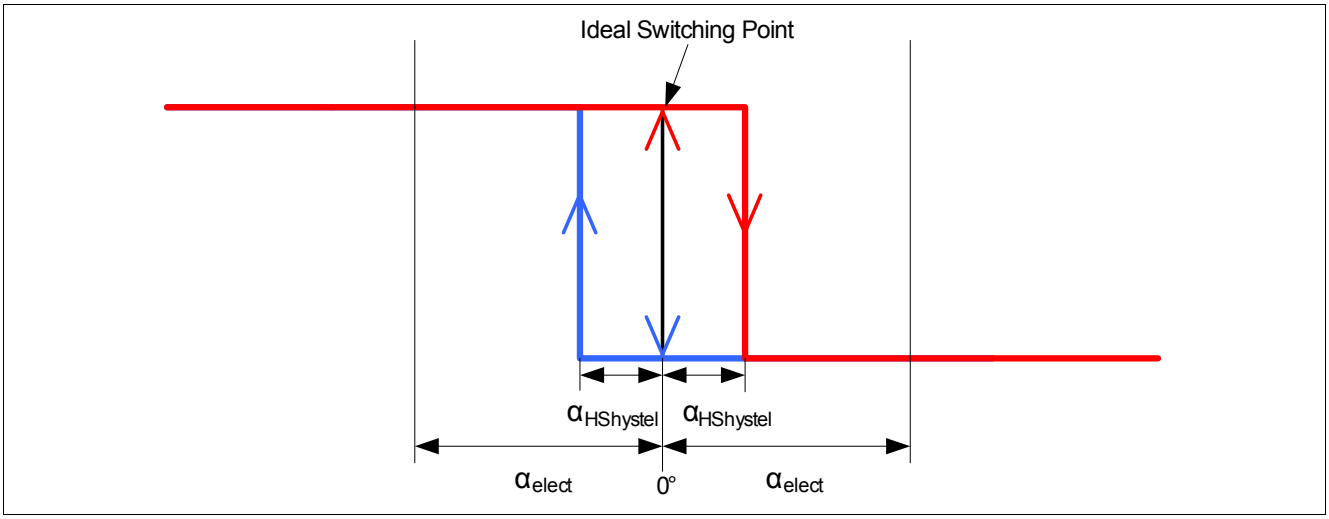

Figure 5-20 HS hysteresis

5.6 Incremental Interface (IIF)

The **I**ncremental **I**nter**f**ace (**IIF**) emulates the operation of an optical quadrature encoder with a 50% duty cycle. It transmits a square pulse per angle step, where the width of the steps can be configured from 9bit (512 steps per full rotation) to 12bit (4096 steps per full rotation) within the register MOD_4 (IFAB_RES)[1]. The rotation direction is given either by the phase shift between the two channels IFA and IFB (A/B mode) or by the level of the IFB channel (Step/Direction mode), as shown in **Figure 5-21** and **Figure 5-22**. The incremental interface can be configured for A/B mode or Step/Direction mode in register MOD_1 (IIF_MOD).

Using the Incremental Interface requires an up/down counter on the microcontroller, which counts the pulses and thus keeps track of the absolute position. The counter can be synchronized periodically by using the SSC interface in parallel. The angle value (AVAL register) read out by the SSC interface can be compared to the stored counter value. In case of a non-synchronization, the microcontroller adds the difference to the actual counter value to synchronize the TLE5012B with the microcontroller.

After startup, the IIF transmits a number of pulses which correspond to the actual absolute angle value. Thus, the microcontroller gets the information about the absolute position. The Index Signal that indicates the zero crossing is available on the IFC pin.

Sensors with preset IIF are available as TLE5012B E1000. The register settings for these sensors can be found in **Chapter 6.2**.

A/B Mode

The phase shift between Phase A and Phase B is determined by the rotation direction of the magnet. By default (ANG_DIR = 0), Phases A follows Phase B to indicate clockwise rotation direction, while Phase B follows Phase A to indicate counterclockwise rotation direction. This behaviour is inverted by setting ANG_DIR = 1.

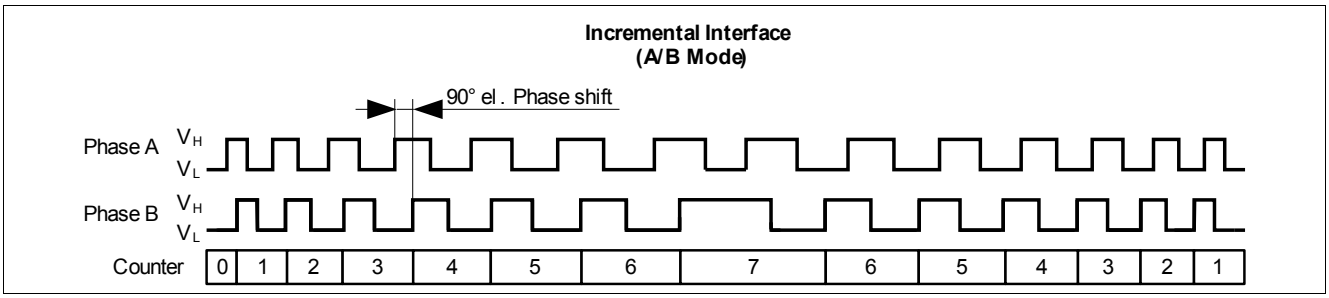

Figure 5-21 Incremental interface with A/B mode

Step/Direction Mode

Phase A pulses out the increments and phase B indicates the direction.

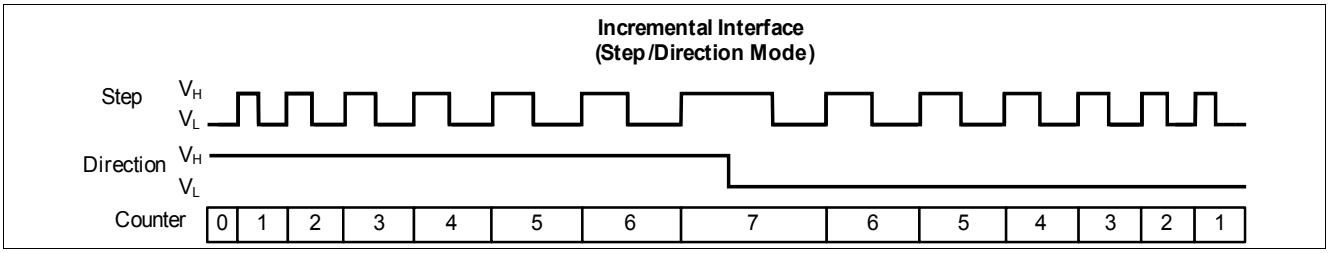

Figure 5-22 Incremental interface with Step/Direction mode

1) Decreasing the number of bits does not increase the maximum rotation speed.

Startup pulses

Just after startup, in absolute mode (default mode in the register MOD_4, bits HSM_PLP), the IIF generates the number of pulses needed to count to the initial angle position on the shortest direction. These pulses may be generated at the maximum frequency on both IFA and IFB pin (see **Table 5-13**) and therefore the start up pulses may take up to 2.1ms to count to an initial angle position of 180° (maximum angular distance). The counting direction may change once the startup position has been reached (depending on whether the shortest direction matched the actual rotation direction or not).Changes of angle position from the initial position during the start-up pulses are tracked.

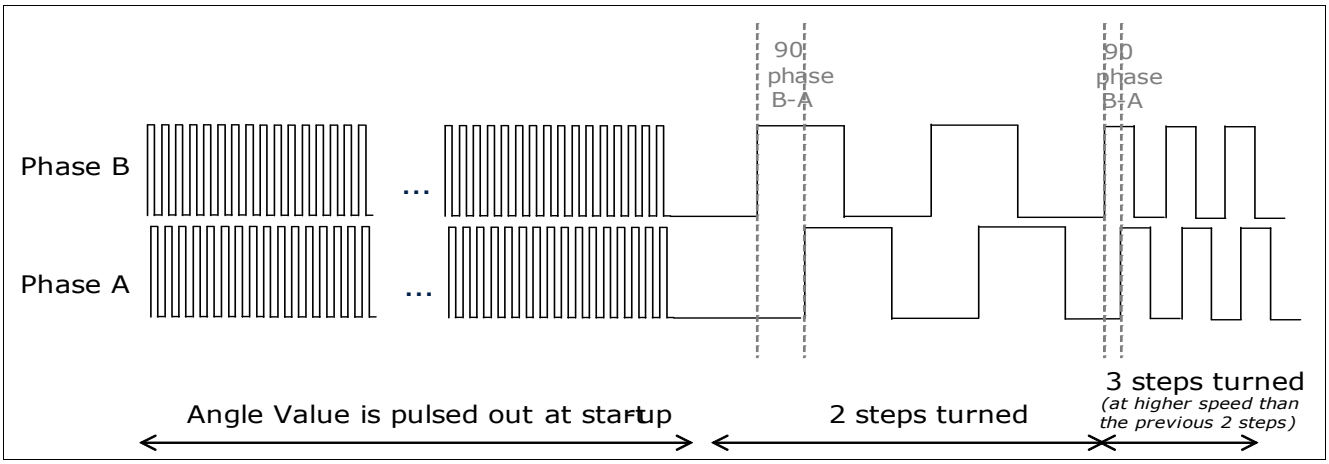

Figure 5-23 Increcremental Interface startup pulses and first step movements at different speeds

The number of pulses indicates the angle value position. The angle can be calculated counting the numjber of pulses:

$$angle = \frac{\#\ pulses\ * 360\ °}{2^{12}} \tag{5.9}$$

Or measuring the length (in seconds) of the train of pulses:

$$angle = \frac{length\ (\sec)\ * 360\ °}{2^{12}\ * 10^{-6}} \tag{5.10}$$

The actual increment needed to reach a new angle position is updated every update rate time (t_{upd}). Depending on the angle speed, pulses are distributed evenly over the update rate time (t_{upd}) up to the maximum increment frequency specified in **Table 5-13**.

Figure 5-24 shows an example where the last pulses have a different frequency. If 1000 pulses (~87.9° angle at startup) have to be transmitted at startup, 1000µs are needed (at maximum frequency). With the default angle update rate time (t_{upd} = 42.7µs), 23.44t_{upd} (1000pulses * 1MHz / 42.7µs) are required to transmit the 1000 pulses. In reality 24t_{upd} are used. The first 23t_{upd} send 982 pulses at 1MHz (23t_{upd} *42.7µs*1Mhz). The remainig 18 pulses are not send at 1MHz (0.44t_{upd}) but at a frequency so that the 18 remaining pulses are distributed over the whole t_{upd} (that is a frequency of 422kHz).

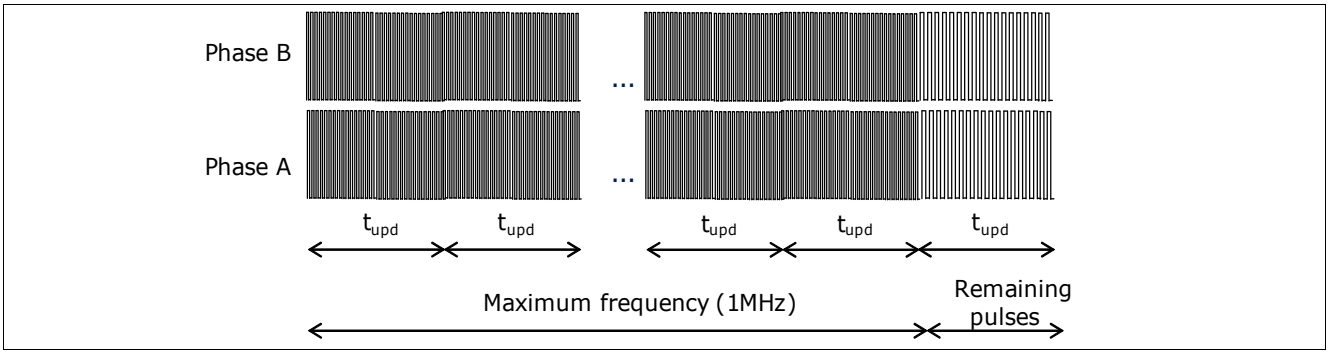

Figure 5-24 Increcremental Interface startup pulses frequency

IIF Index

The IFC pin -or IIF Index- generates one pulse at zero crossing. This output can be used as check or as comparison with the Phase A/Phase B outputs. The IIF Index pulse width ($t_{0°}$) duration is specified in **Table 5-13**.

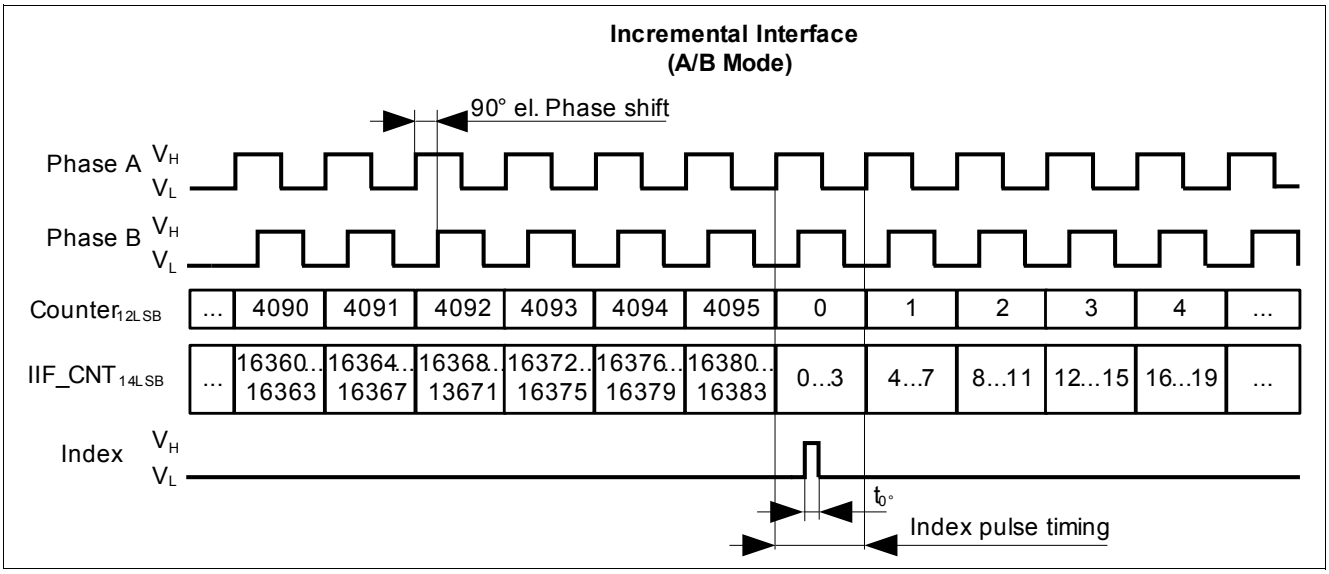

Figure 5-25 IIF Index pulse in A/B Mode

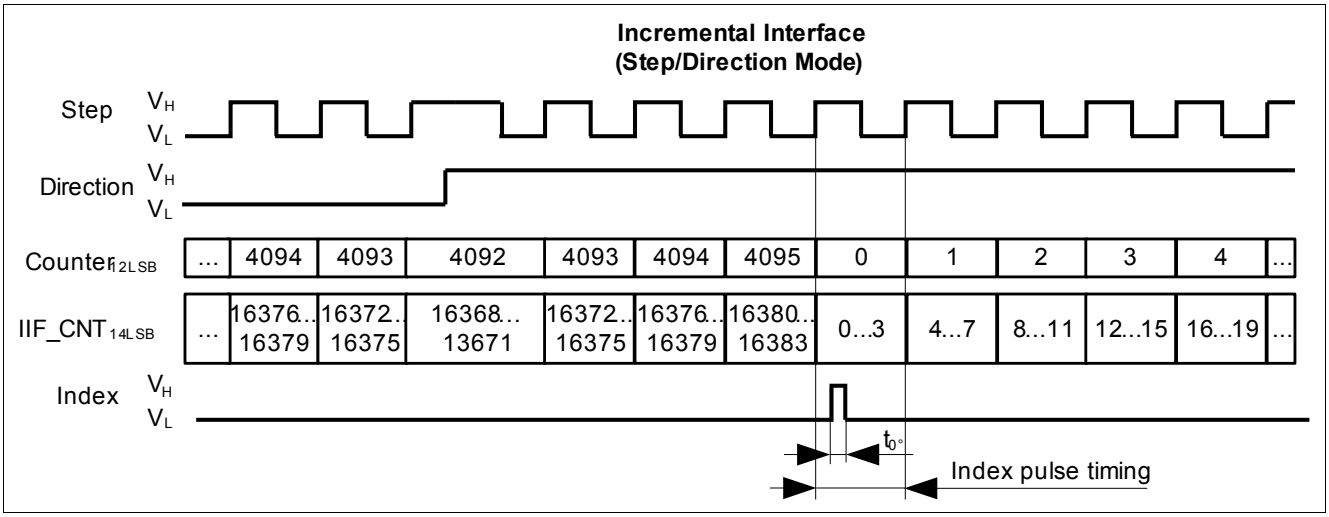

Figure 5-26 IIF Index pulse in Step/Direction Mode

*Note: In **Figure 5-25** and **Figure 5-26** the Index pulse timing shows the start time of the Index pulse. In applications rotating above 2930rpm the period of Phase A/B will be smaller than the length of the Index pulse.*

Hysteresis effect when changing rotation direction

The TLE5012B has an hysteresis threshold to avoid pulsing unintended steps due to mechanical vibrations of the rotor or system. The default hysteresis is 0.703° and it can be changed in the register IFAB (IFAB_HYST). Once the hysteresis threshold is surpassed, the Phase A and Phase B output the missed steps and continue to work in their normal operation mode. Pulsing the missed pulses allows to count all the steps and correctly calculate the angle position. The number of missed pulses depends on the hysteresis threshold and on the step resolution.

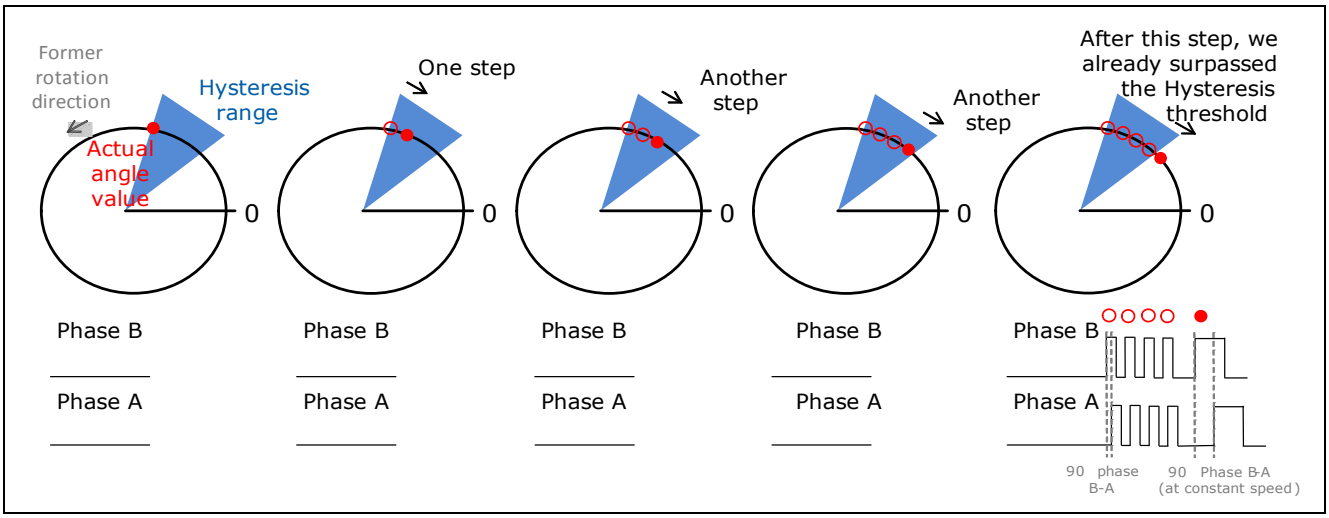

Figure 5-27 Phase A/B output during a rotation direction change due to the hysteresis threshold

Table 5-13 Incremental Interface

Parameter	Symbol	Values			Unit	Note / Test Condition
		Min.	Typ.	Max.		
Incremental output frequency	f_{Inc}			1.0	MHz	Frequency of phase A and phase B[1)]
Index pulse width	$t_{0°}$		5		µs	0°[1)]

1) Not subject to production test - verified by design/characterization

6 SSC Registers

The TLE5012B includes several registers that can be accessed via Synchronous Serial Communication (SSC) to read data as well as to write to configure settings.

6.1 Registers Overview

There are twenty-two documented registers, but only a few are relevant to read data or to configure the TLE5012B. Many extra features that are also documented may only be used in very specific cases. In the following bitmap the relevant bits can be identified.

The most important bits are the ones indicated in green, orange and grey. The green bits contain calculated data; the bright green bits are additional data that may only be relevant for some specific applications. The orange bits are configuration parameters, which can be changed if the default values are not the desired ones. The dark orange bits are relevant if connecting several devices (sensors) to a same master (microcontroller). The grey bits are relevant for diagnosis to address the demands for functional safety.

There are also yellow bits for the autocalibration and calibration values. Finally the purple bits mark extra features that can be configured, if desired.

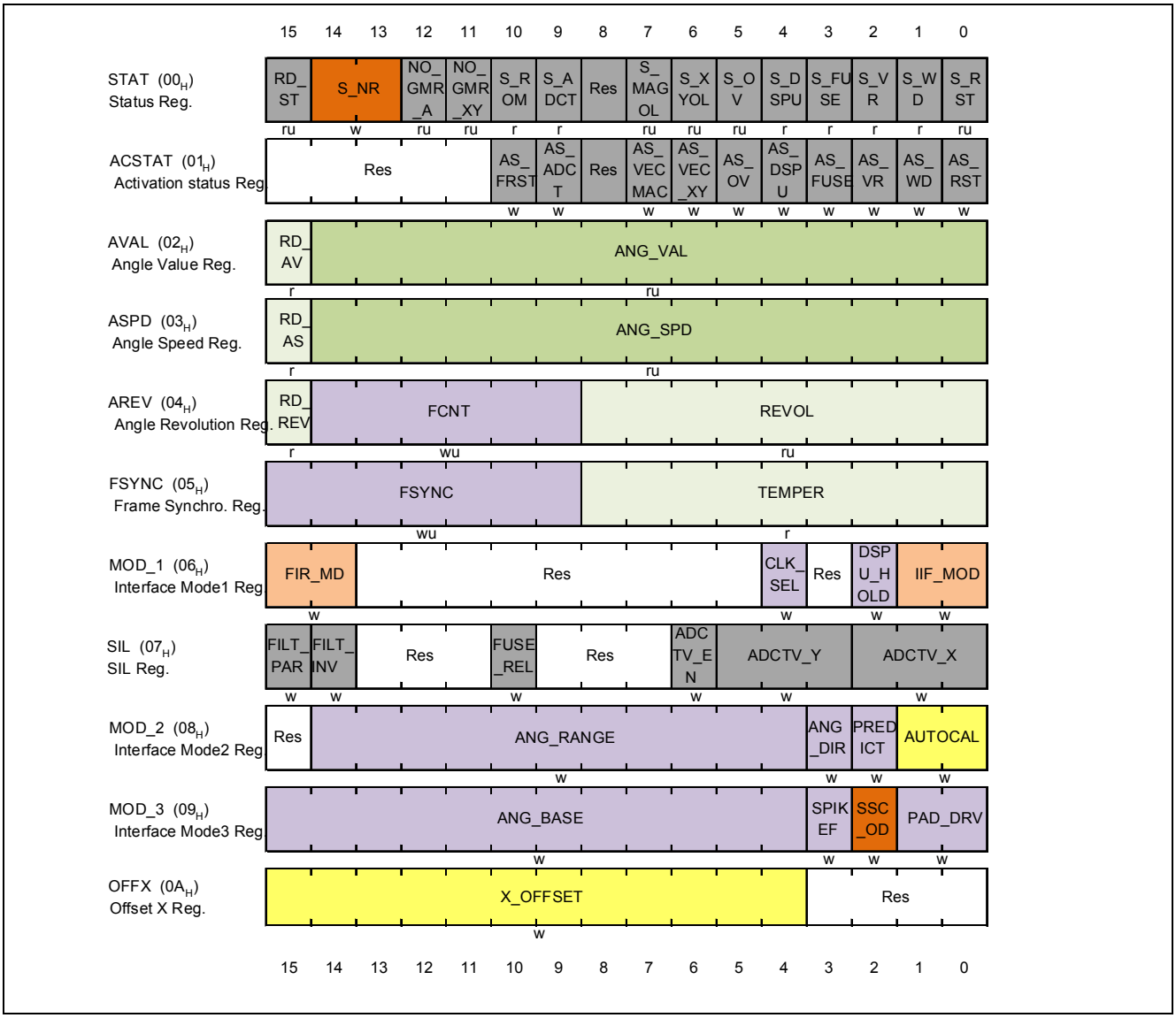

Figure 6-1 Bitmap Part 1

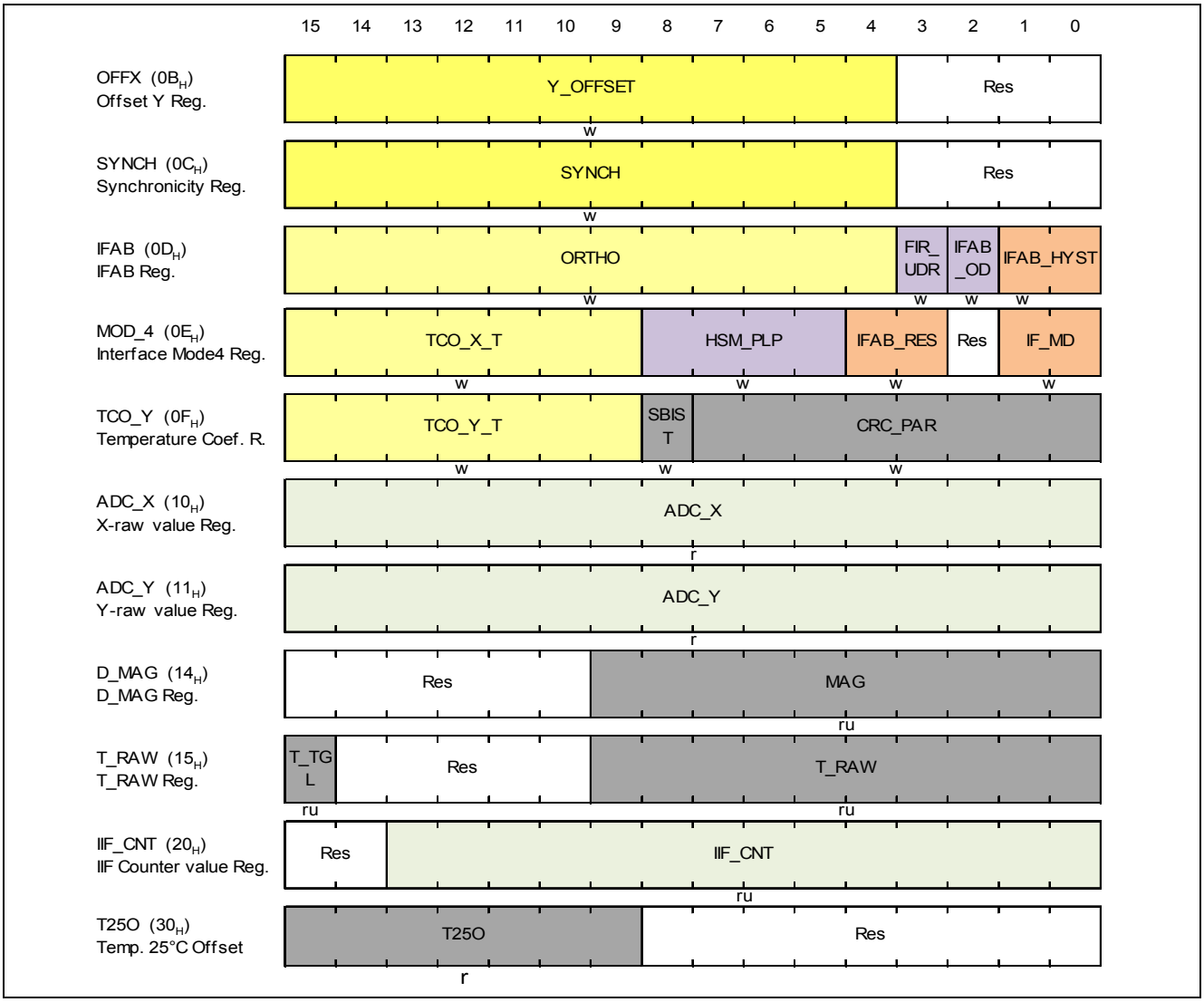

Figure 6-2 Bitmap Part 2

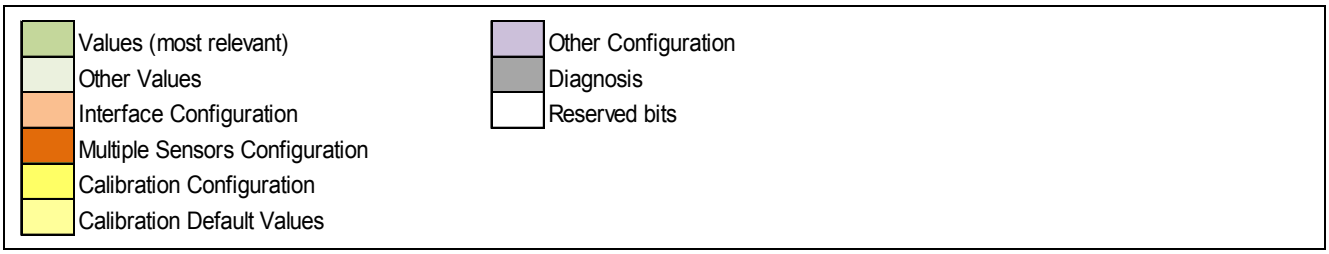

Figure 6-3 Colour legend for the Bitmap

Most relevant data and configuration bits

The most relevant data and configuration bits are described below. To find more details (e.g. whether to set the bit to “high” or “low”), please refer to **Chapter 6.2**.

Angle value: the angle value can be found in the AVAL register (02_H) under the ANG_VAL bits (bits 14:0).

Angle speed: the angle speed can be found in the ASPD register (03_H) under the ANG_SPD bits (bits 14:0).

Number of revolutions: the number of revolutions can be found in the AREV register (04_H) represented by the REVOL bits (bits 8:0). For every full rotation in counter-clockwise direction the number of revolutions increments by one; for every full rotation in clockwise direction it decrements by one.

Raw values from the two GMR sensors: the raw values from the two GMR sensors can be accessed via the ADC_X and ADC_Y registers (10_H and 11_H respectively).

Resolution: the MOD_4 register ($0E_H$) contains two IFAB_RES bits (bits 4:3) that are multi-purpose. For each interface these bits allow to choose between four different resolutions if the default ones are not the most adequate for the application. For PWM interface the frequency can be chosen from 244Hz to 1953Hz, therefore it can be chosen how often the updated angle value has to be transmitted. For IIF pulses can be transmitted for different step resolutions from 0.088° to 0.703°. For SPC it can be chosen if angle resolution should be in 12 or 16 bits, or also if two extra nibbles for the temperature should be transmitted. At reset the default resolution is restored.

Interface mode: there are different TLE5012B derivates with different default interfaces. Still, the interface of the TLE5012B can also be chosen via SSC at start-up by setting the two IF_MD bits (bits 1:0) of the MOD_4 register ($0E_H$). At reset the default interface of the derivate is restored. It is recommended to configure any IF_MD setting early after a hardware reset to guarantee a correct switch to the desired interface mode.

Autocalibration: the TLE5012B is a factory-calibrated sensor. Still, automatic calibration of offset and amplitude synchronicity can be enabled for applications with full-turn capability in the MOD_2 register (08_H) under the AUTOCAL bits (bits 1:0) to compensate lifetime and temperature effects. At reset the default factory-calibrated parameters are restored. For further information on autocalibration refer to **Chapter 4.1**.

Prediction: the prediction function can be enabled/disabled in the MOD_2 register (08_H) under the PREDICT bit (bit 2). As described in **Chapter 4.2** Prediction allows to calculate the angle value around one period (t_{update}) before than if prediction is disabled. The prediction function is linear and may not be recommended for cases where the rotation speed changes abruptly. At reset the default status is restored.

6.1.1 Bit Types

The TLE5012B contains read, write and update registers as described in **Table 6-1**.

Table 6-1 Bit Types

Abbreviation	Function	Description
r	Read	Read-only registers
w	Write	Read and write registers
u	Update	Update buffer for this bit is present. If an update is triggered, the immediate values are stored in this update buffer simultaneously. This enables a snapshot of all necessary system parameters at the same time.

Write bits are mostly for configuration purposes. Mostly to select other configuration settings than the default ones from the derivate (e.g. change resolution, hysteresis, update rate, enable/disable features such as autocalibration...), but also possible to overwrite compensation parameters.

Some bits are also marked as update bits. This function is meant to obtain the data from multiple registers in the very exact moment. In normal operation, if a Command Word is sent to read multiple registers, due to the fact that some time is needed to process each READ, we will be reading registers in different moments (current data is read, not data from the same point in time).

To read data from the very exact time (and not current data) an Update-Event has to be generated before sending the command word. As explained in **Chapter 5.2.2** under the **Data communication via SSC** section, the Update-Event is generated by setting the CSQ line to low for 1µs ($t_{CSupdate}$). This will store the values in the update buffer at the same time; it is a snapshot. These values will remain in the buffer till another Update-Event is generated or till the TLE5012B is switched off.

To read the update buffer which has just been generated, the Command World has to set the UPD (Update-Register Access) bit to high. The Command Word structure is described in **Chapter 5.2.2** under the **SSC Data Transfer** section. With UPD set to high the update buffer will be read, which contains the data from the very exact moment and not the normal registers (which contain current values).

6.1.2 Communication Examples

This chapter gives some short SSC communication examples. The sensor has to be selected first via CSQ, and SCK must be available for the communication.

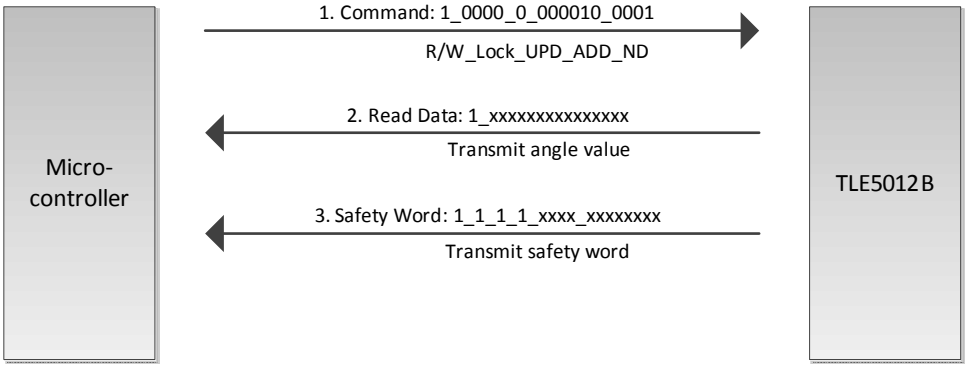

Figure 6-4 SSC command to read angle value

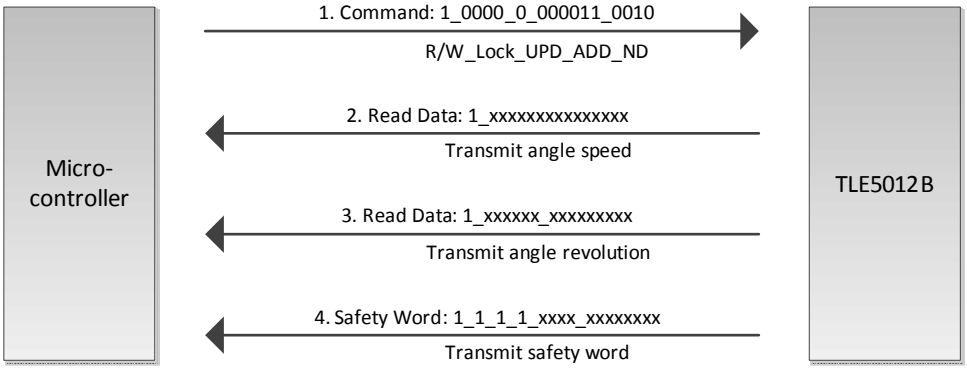

Figure 6-5 SSC command to read angle speed and angle revolution

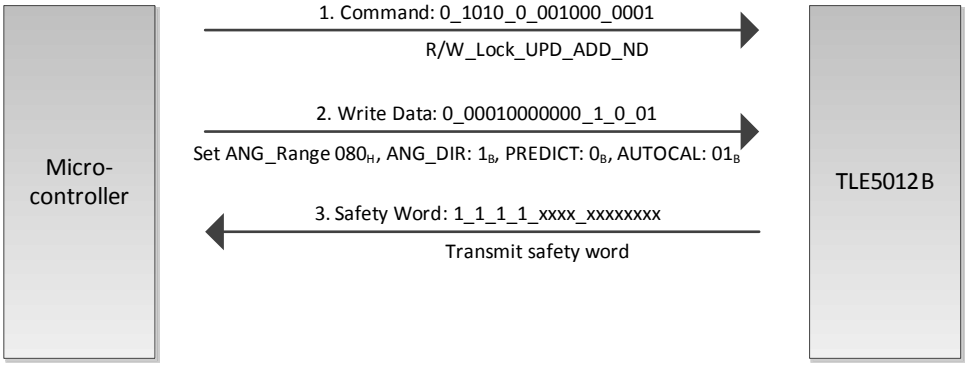

Figure 6-6 SSC command to change Interface Mode2 register

Writing process to avoid overwritting

When writing in a certain field of a register, it is important to not overwrite the bits from the other fields in the same register. Therefore -for the registers with many fields- a read has to be done previous to a write, so the content of the bits from the register can be written back and avoid unintended overwriting in other fields than the desired field. After a write is recommended to do a read to ensure that the values are correctly set. **Figure 6-7** shows the described sequence when a configuration parameter needs to be changed.

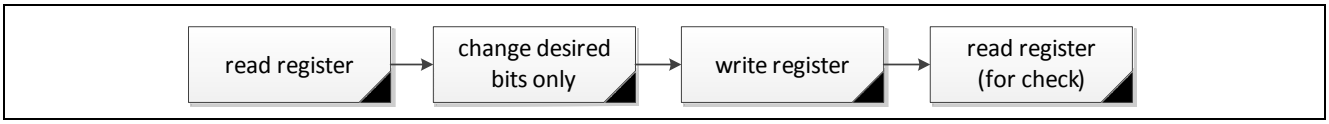

Figure 6-7 SSC data transfer sequence to change a configuration parameter

In the following example the Incremental Interface resolution of a TLE5012B E1000 derivate will be changed from the default 0.088° (IFAB_RES bits 00_B in the MOD_4 register) to 0.352° (IFAB_RES bits 10_B) via a SSC data tranfer. First, the whole MOD_4 register is read. The bits will be copied in the write word and only the two IFAB_RES bits changed to the desired configuration. Finally a read confirms that the desired bits have changed and the rest of the bits remain as they were.

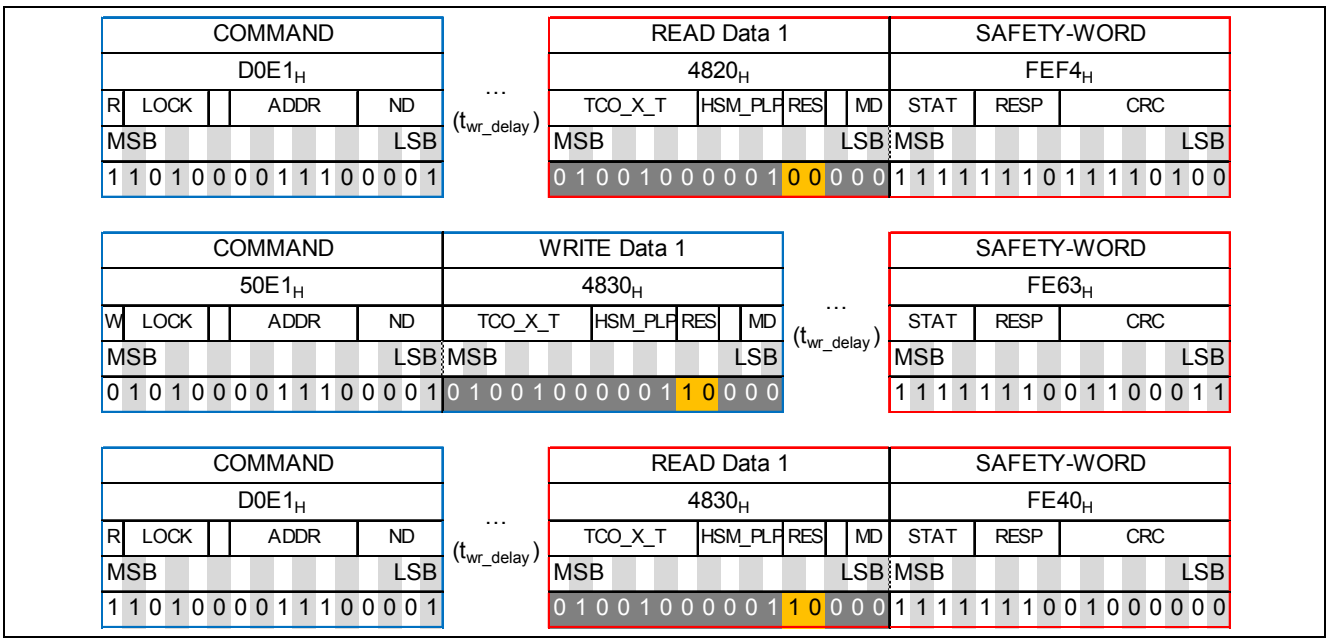

Figure 6-8 Example of a SSC data transfer sequence to change a configuration parameter

6.1.3 Signed registers and Two's complement

Many registers are described as signed registers. Data in the registers such as the Angle Speed and also configuration parameters such as the X and Y Offset, the Amplitude Synchronicity, Orthogonality Correction and the Offset Temperature Coefficients are, among others, signed registers. That means, that they are stored in two's complement. The Angle Value is also a signed register (-180°...179.9°), but can also be viewed as unsigned (0...359.9°).

A two's complement number is generated by the following equation:

(6.1)

$$Value = -b_{MSB} * 2^{N-1} + \sum_{i=0}^{N-2} b_i * 2^i$$

For example, if the AVAL Register value is 1100 1101 1001 0011 the MSB indicates that the RD_AV field is "high" and a new angle value is present (ANG_VAL). ANG_VAL are represented by the following 15 bits (100 1101 1001 0011). Therefore the angle value is:

(6.2)

$$Value = -b_{MSB} * 2^{N-1} + \sum_{i=0}^{N-2} b_i * 2^i = -1*2^{15-1} + 0*2^{15-2} + 0*2^{15-3} + 1*2^{15-4} + 1*2^{15-5} + 0*2^{15-6} + 1*2^{15-7} +$$
$$+1*2^{15-8} + 0*2^{15-9} + 0*2^{15-10} + 1*2^{15-11} + 0*2^{15-12} + 0*2^{15-13} + 1*2^{15-14} + 1*2^{15-15} = -1*2^{14} + 1*2^{11} +$$
$$+1*2^{10} + 1*2^{8} + 1*2^{7} + 1*2^{4} + 1*2^{1} + 1*2^{0} = -16384 + 2048 + 1024 + 256 + 128 + 16 + 2 + 1 = -12909$$

And if we calculate the angle (formula provided in the AVAL register description) we can calculate the angle:

(6.3)

$$Angle[°] = \frac{360°}{2^{15}} ANG\_VAL[digits] = \frac{360°}{32768} * (-12909) = -141.82°$$

6.1.4 Zero position configuration

Each device has a factory-calibrated angle base to make the 0° direction parallel to the edge of the chip.

For some applications it may be necessary to specifically set the 0° angle position after sensor and magnet are assembled. In particular if interfaces are used which do not output the absolute angle, incremental interface or Hall-Switch-Mode, a mechanical reference position is to be defined in an end-of-line calibration.

Therefore, the following steps should be performed:

1. Move the mechanical assembly to the desired 0°-position.
2. Read the content of the ANG_BASE in the MOD_3 register (address 09_H).
3. Read the content of the AVAL register (address 02_H) and remove the three LSBs to obtain a 12 bit angle value (rounded to minimize truncation error. To round, add 0x0008 to the read angle value prior to cut off the 3 LSBs).
4. Subtract (when ANG_DIR = 0) or add (when ANG_DIR = 1) the 12 bit angle value obtained in step 3 from the value of the ANG_BASE register and store the result in the non-volatile memory of the microcontroller.
5. On every start-up of the TLE5012B, write the stored value into the ANG_BASE register. The ANG_BASE register should be written before Autocalibration is enabled (so either disable Autocalibration to write this register, or write this register within the first 120µs after a hardware reset).

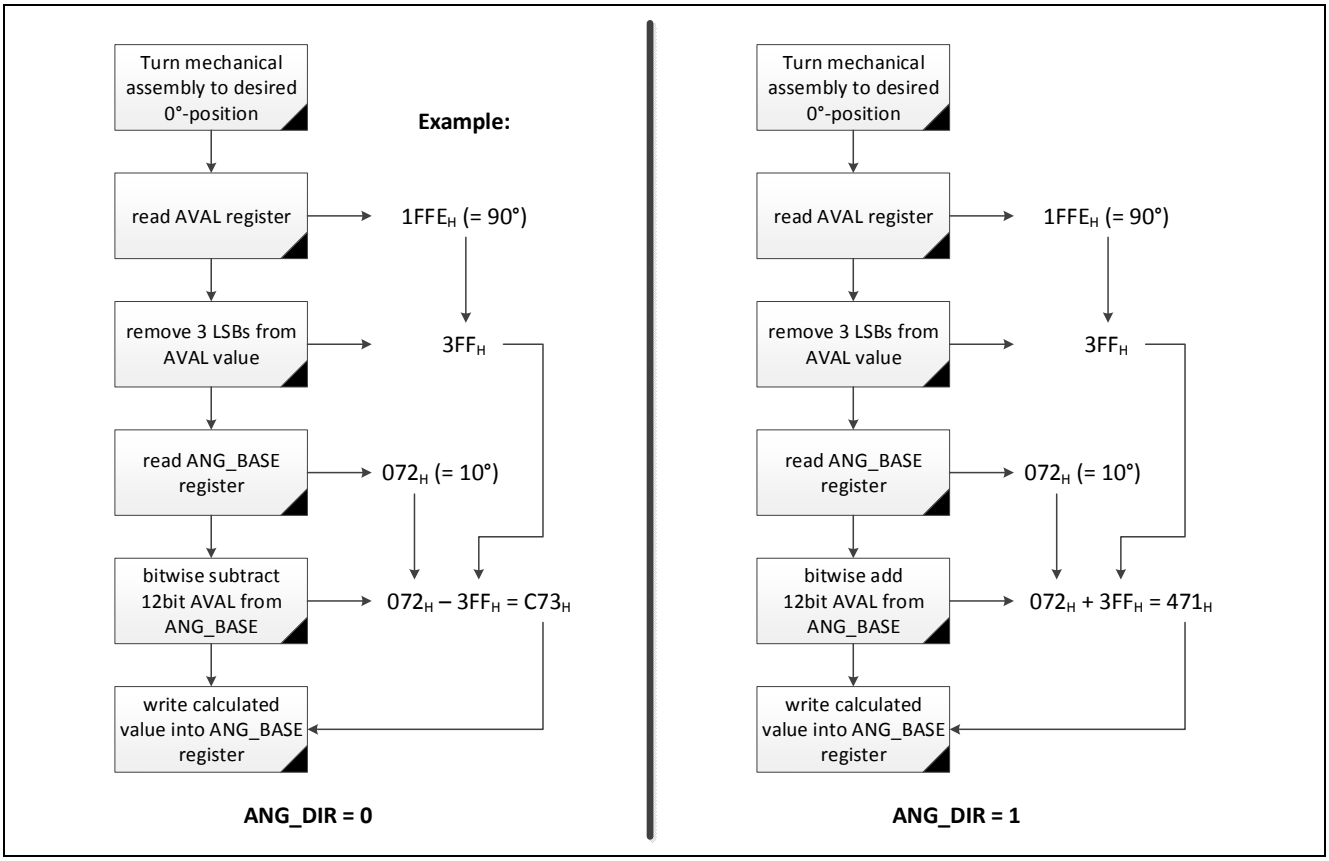

Figure 6-9 Flow-Chart of ANG_BASE calibration procedure

Figure 6-10 shows an example with the register values when setting the angle 191.9° (or -168.1°) as the 0°-position when ANG_DIR = 0,

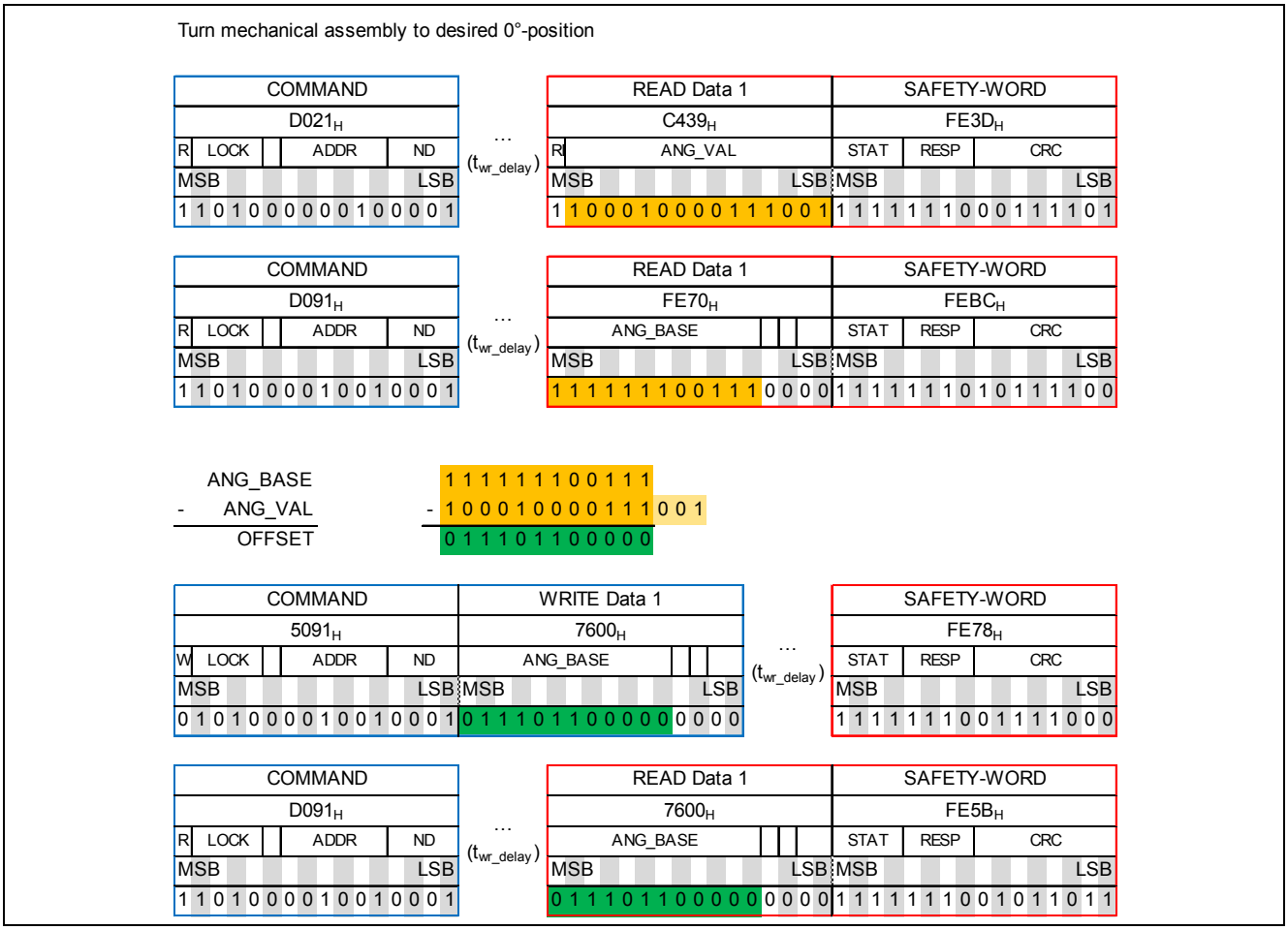

Figure 6-10 SSC data transfer to configure the zero position

Figure 6-11 shows in other than the binary domain the values of the registers and the offset for the example above:

		Binary (MSB … LSB)	Decimal	Resolution Bits	Resolution °	Angle °		
ANG_BASE	*Unsigned*	1 1 1 1 1 1 1 0 0 1 1 1	4071	12	0.088	357.8		
	Signed	-2048 1024 512 256 128 64 32 0 0 4 2 1	-25	12	0.088	-2.2		
ANG_VAL	*Unsigned*	1 0 0 0 1 0 0 0 0 1 1 1 0 0 1	17465	15	0.011	191.9		
	Signed	-16384 0 0 0 1024 0 0 0 0 32 16 8 0 0 1	-15303	15	0.011	-168.1		
ANG_VAL (12 MSBs)	*Unsigned*	1 0 0 0 1 0 0 0 0 1 1 1	2183	12	0.088	191.9		
	Signed	-2048 0 0 0 128 0 0 0 0 4 2 1	-1913	12	0.088	-168.1		
ANG_BASE		1 1 1 1 1 1 1 0 0 1 1 1					-2.2	357.8
- ANG_VAL		- 1 0 0 0 1 0 0 0 0 1 1 1					-168.1	191.9
OFFSET		0 1 1 1 0 1 1 0 0 0 0 0					165.9	165.9
		0 1024 512 256 0 64 32 0 0 0 0 0	1888	12	0.088	165.9		

Figure 6-11 Zero position configuration in different domains

6.2 Registers Descriptions

This section describes the registers of the TLE5012B and replaces the **TLE5012B Register Setting** document. It also defines the read/write access rights of the specific registers. **Table 6-2** identifies the values with symbols. Access to the registers is accomplished via the SSC Interface.

Table 6-2 Register Overview

Register Short Name	Register Long Name	Offset Address	Page Number
Registers Descriptions, **Register Descriptions**			
STAT	STATus register	00_H	**75**
ACSTAT	ACtivation STATus register	01_H	**79**
AVAL	Angle VALue register	02_H	**81**
ASPD	Angle SPeeD register	03_H	**82**
AREV	Angle REVolution register	04_H	**83**
FSYNC	Frame SYNChronization register	05_H	**84**
MOD_1	Interface MODe1 register	06_H	**85**
SIL	SIL register	07_H	**86**
MOD_2	Interface MODe2 register	08_H	**88**
MOD_3	Interface MODe3 register	09_H	**90**
OFFX	OFFset X	$0A_H$	**91**
OFFY	OFFset Y	$0B_H$	**91**
SYNCH	SYNCHronicity	$0C_H$	**92**
IFAB	IFAB register	$0D_H$	**93**
MOD_4	Interface MODe4 register	$0E_H$	**94**
TCO_Y	Temperature COefficient register	$0F_H$	**97**
ADC_X	ADC X-raw value	10_H	**98**
ADC_Y	ADC Y-raw value	11_H	**98**
D_MAG	Angle vector MAGnitude	14_H	**98**
T_RAW	Temperature sensor RAW-value	15_H	**100**
IIF_CNT	IIF CouNTer value	20_H	**101**
T25O	Temperature 25°C Offset value	30_H	**101**

The registers are addressed wordwise.

Configuration Register Checksum

To monitor the integrity of the sensor configuration, the TLE5012B performs a cyclic redundancy check of the configuration registers in address range 08_H to $0F_H$. The corresponding 8 bit CRC checksum is stored in register CRC_PAR (address $0F_H$). When changing one or more of these registers, a new checksum has to be calculated from registers 08_H to $0F_H$ using the generator polynomial described in **Chapter 5.2.4**, and written to the CRC_PAR register. Otherwise, a CRC fail error (status bit S_FUSE = 1) will occur. The CRC check can be disabled by setting register AS_FUSE to 0. The execution of the cyclic redundancy check is automatically deactivated if auto calibration is active, as auto calibration performs periodical adjustments of several configuration registers.

Derivate-Specific Reset Values:

The reset values of certain registers (for example interface settings) are set by laser fuses which are specific for the employed derivate (Exxxx number) of the TLE5012B. In this case, the reset values in the register table are marked as “derivate-specific”. A list of specific reset values for all derivates is given in **Chapter 7.6**.

Factory-Calibrated Reset Values:

The reset values of calibration registers (for example offset calibration) are set by laser fuses which are written during the factory calibration of the sensor. These values are specific for each individual device. In this case, the reset values in the register table are marked as “device-specific”. When modifying parts of these registers, the register content should be read first, then only the relevant bits should be changed and the content should be written back into the register in order to avoid unintended over-writing of the calibration values.

Multi-Purpose Registers:

Some configuration registers have more than one assignment and change different settings depending on the selected interface for the IFA, IFB, IFC pins (selectable via the IF_MD register, address $0E_H$). These registers are marked as “multi-purpose”, and their assignments are described separately for each relevant interface.

6.2.1 Register Descriptions

Status Register

STAT	Offset	Reset Value
Status Register	00_H	0000_H

15	14	13	12	11	10	9	8
RD_ST	S_NR		NO_GMR_A	NO_GMR_XY	S_ROM	S_ADCT	Reserved
ru	w		ru	ru	r	r	

7	6	5	4	3	2	1	0
S_MAGOL	S_XYOL	S_OV	S_DSPU	S_FUSE	S_VR	S_WD	S_RST
ru	ru	ru	r	r	r	r	ru

Field	Bits	Type	Description
RD_ST	15	ru	**Read Status** 0_B status values not changed since last readout. 1_B status values changed. The bit is cleared on a read-out (valid for both: normal operation and update buffer). Note: If an update event (register snapshot) is done after a normal read, RD_ST will not be set to 1_B in the following read (either update read or normal read) unless a new value is available. Reset: 1_B
S_NR	14:13	w	**Slave Number** Used to identify up to four sensors in a bus configuration. The levels on pin SCK and pin IFC can be used to change the default slave number for SPC interface. Pin SCK represents S_NR[13] and pin IFC the S_NR[14]. Reset: 00_B
NO_GMR_A	12	ru	**No valid GMR Angle Value** Cyclic check of DSPU output. Flag will be set as long as error persists and is not reset by SSC read-out. 0_B valid GMR angle value on the interface. 1_B no valid GMR angle value on the interface (e.g test vectors). Reset: 0_B

Field	Bits	Type	Description
NO_GMR_XY	11	ru	**No valid GMR XY Values** Cyclic check of ADC input. Flag will be set as long as error persists and is not reset by SSC read-out. 0_B valid GMR_XY values on the ADC input and thus on filter output. 1_B no valid GMR_XY values on the ADC input (e.g. test vectors). Reset: 0_B
S_ROM	10	r	**Status ROM** Check of ROM-CRC at startup. The DSPU does not start after fail. Flag is not reset by SSC read-out. SSC (SPI) access possible. 0_B CRC ok. 1_B CRC fail or running. Reset: 0_B
S_ADCT	9	r	**Status ADC-Test**[1)] Check of signal path with test vectors. All test vectors are tested at startup. The error flag will be cleared on a SSC read-out, but will be set again at the end of the current firmware run, if a previous ADC test failed (affects safety word and fast SSC read-outs). So the ADC BIST needs to be re-run and pass to actually clear this error. Activation in operation via AS_ADCT possible. 0_B Test vectors ok 1_B Test vectors out of limit Reset: 0_B
S_MAGOL	7	ru	**Status Magnitude Out of Limit**[1)] Vector length's cyclic check of X and Y values after error compensation. The bit is updated based on the current angle value and thus the recommendation is to read it in update mode, if a consistent read-out is desired. The bit is reset by a normal SSC read-out. Deactivation via AS_VEC_MAG. 0_B GMR-magnitude ok 1_B GMR-magnitude out of limit Reset: 0_B
S_XYOL	6	ru	**Status X,Y Data Out of Limit**[1)] Cyclic check of X and Y raw values. This bit is updated based on the current angle value and thus the recommendation is to read it in update mode, if a consistent read-out is desired. The bit is reset by a normal SSC read-out. Deactivation via AS_VEC_XY 0_B X,Y data ok 1_B X,Y data out of limit (>23230 digits, <-23230 digits) Reset: 0_B

Field	Bits	Type	Description
S_OV	5	ru	**Status Overflow**[1)] Cyclic check of DSPU overflow. This bit is updated based on the current angle value and thus the recommendation is to read it in update mode, if a consistent read-out is desired. The bit is reset by a normal SSC read-out. Deactivation via AS_OV. 0_B No DSPU overflow occurred 1_B DSPU overflow occurred Reset: 0_B
S_DSPU	4	r	**Status Digital Signal Processing Unit**[1)] Check of DSPU, CORDIC and CAPCOM at startup. Activation in operation via AS_DSPU possible, but only recommended during application halt and the error will not show up, since BIST does not set the error flag (only clears it). Error will only show up, after a watchdog stop has been triggered and is not cleared with a SSC read-out, but only with a chip reset. 0_B DSPU self-test ok 1_B DSPU self-test not ok, or self test is running Reset: 0_B
S_FUSE	3	r	**Status Fuse CRC**[1)] Cyclic CRC check of configuration registers 08_H to $0F_H$ and startup CRC check of configuration fuses. A CRC error will remain as long as it persists and has not been read-out over SSC. Deactivation via AS_FUSE. CRC check is automatically disabled if auto calibration is active. *Note: When changing the content of one or more configuration registers in address range 08_H to $0F_H$, a new CRC has to be calculated and stored in register CRC_PAR (address $0F_H$), otherwise CRC fail will occur. Also see* ***Chapter 4.1*** *section "Enabling and Disabling Autocalibration" for how to avoid S_FUSE errors in conjuction with autocalibration.* 0_B CRC ok 1_B CRC fail Reset: 0_B
S_VR	2	r	**Status Voltage Regulator**[1)] Permanent check of internal and external supply voltages. Error will be signalized as long as it persists and has not been read out. Deactivation via AS_VR. 0_B Voltages ok 1_B V_{DD} over voltage; V_{DD}-off; GND-off; or V_{OVG}; V_{OVA}; V_{OVD} too high Reset: 0_B

Field	Bits	Type	Description
S_WD	1	r	**Status Watchdog** Permanent check of watchdog. After watchdog-counter overflow, the DSPU stops. Deactivation via AS_WD 0_B normal operation 1_B watchdog counter expired (DSPU stop), AS_RST must be activated. Outputs deactivated, pull up/down active. Reset: 0_B
S_RST	0	ru	**Status Reset**[2)] Indication that there has been a reset state. 0_B no reset since last readout. 1_B indication of power-up, short power-break, firmware or active reset. Both normal register and update buffer will indicate “1” if no prior read-out has been done (and even if no update pulse has been sent out). Reset: 1_B

1) bit remains “1” after error occurred. Bit is cleared to “0” when status register is read via SSC command.

2) bit remains “1” after reset occurred. Bit is cleared to “0” when status register is read via SSC command.

Note: When an error occurs, the corresponding bit in the safety word remains “0” until the status register is read.

Activation Status Register

ACSTAT	Offset	Reset Value
Activation Status Register	01_H	$18EE_H$

15				11	10	9	8
Reserved					AS_FRST	AS_ADCT	Reserved
					wu	wu	

7	6	5	4	3	2	1	0
AS_VEG_MAG	AS_VEC_XY	AS_OV	AS_DSPU	AS_FUSE	AS_VR	AS_WD	AS_RST
wu	wu	wu	wu	wu	wu	wu	w

Field	Bits	Type	Description
Res	15:11	res	**Reserved** Reset: 00011_B (during operation may change to 01011_B)
AS_FRST	10	wu	**Activation of Firmware Reset** All configuration registers retain their contents. 0_B default or after execution of firmware reset. Firmware also sets S_RST at this point. 1_B activation of firmware reset. Reset: 0_B
AS_ADCT	9	wu	**Enable ADC Test vector Check** Activation of this test is only allowed with deactivated AUTOCAL. X, Y and Temp channel will be checked. 0_B after execution. 1_B activation of ADC Test vector Check. Reset: 1_B (for update buffer 0_B if no update command send before)
AS_VEC_MAG	7	wu	**Activation of Magnitude Check** 0_B monitoring of magnitude disabled[1)]. 1_B monitoring of magnitude enabled. Reset: 1_B (for update buffer 0_B if no update command send before)
AS_VEC_XY	6	wu	**Activation of X,Y Out of Limit-Check** 0_B monitoring of X,Y Out of Limit disabled[1)]. 1_B monitoring of X,Y Out of Limit enabled. Reset: 1_B (for update buffer 0_B if no update command send before)
AS_OV	5	wu	**Enable of DSPU Overflow Check** 0_B monitoring of DSPU Overflow disabled[1)]. 1_B monitoring of DSPU Overflow enabled. Reset: 1_B (for update buffer 0_B if no update command send before)

Field	Bits	Type	Description
AS_DSPU	4	wu	**Activation DSPU BIST** 0_B after execution 1_B activation of DSPU BIST or BIST running Reset: 1_B (for update buffer 0_B if no update command send before)
AS_FUSE	3	wu	**Activation Fuse CRC** A write in any of the fuse registers will set this bit automatically (automatically enabled by deactivation of AUTOCAL). AUTOCAL disables register CRC check regardless of the AS_FUSE setting. 0_B monitoring of CRC disabled. Clearing this activation bit will also disable reporting of S_FUSE errors after a remaining error has been read-out. 1_B monitoring of CRC enabled Reset: 1_B (for update buffer 0_B if no update command send before)
AS_VR	2	wu	**Enable Voltage Regulator Check** 0_B check of regulator voltages disabled. Clearing this activation bit will also disable reporting of S_VR error after a remaining error has been read-out. 1_B check of regulator voltages enabled Reset: 1_B (for update buffer 0_B if no update command send before)
AS_WD	1	wu	**Enable DSPU Watchdog** 0_B DSPU watchdog monitoring disabled. The S_WD status will be immediately cleared, when this bit is cleared. 1_B DSPU Watchdog monitoring enabled. Reset: 1_B (for update buffer 0_B if no update command send before)
AS_RST	0	w	**Activation of Hardware Reset** Activation occurs after CSQ switches from ’0’ to ’1’ after SSC transfer. 0_B after execution (write only, thus always returns “0”). 1_B activation of HW Reset (S_RST is set). Reset: 0_B

1) existing error may remain in STAT register even after SSC read-out due to asynchronity between SSC write of AC_STAT register and internal firmware execution. Thus this activation bit should only be cleared during start-up.

Angle Value Register

AVAL	Offset	Reset Value
Angle Value Register	**02_H**	**8000_H**

15	14						8
RD_AV	ANG_VAL						
ru	ru						

7							0
ANG_VAL							
ru							

Field	Bits	Type	Description
RD_AV	15	r	**Read Status, Angle Value** 0_B no new angle value since last readout 1_B new angle value (ANG_VAL) present. The bit is cleared on a read-out (valid for both: normal operation and update buffer). Note: If an update event (register snapshot) is done after a normal read, RD_AV will not be set to 1_B in the following read (either update read or normal read) unless a new value is available. Reset: 1_B
ANG_VAL	14:0	ru	**Calculated Angle Value (signed 15-bit)** $Angle[°] = \frac{360°}{2^{15}} ANG\_VAL[digits]$ (6.4) 4000_H -180° (valid for ANG_RANGE = 0x080) 0000_H 0° $3FFF_H$ +179.99° (valid for ANG_RANGE = 0x080) Reset: 0_H

Angle Speed Register

ASPD	Offset	Reset Value
Angle Speed Register	03_H	8000_H

15	14						8
RD_AS	ANG_SPD						
ru	ru						

7							0
ANG_SPD							
ru							

Field	Bits	Type	Description
RD_AS	15	r	**Read Status, Angle Speed** 0_B no new angle speed value since last readout 1_B new angle speed value (ANG_SPD) present. The bit is cleared on a read-out (valid for both: normal operation and update buffer). Note: If an update event (register snapshot) is done after a normal read, RD_AS will not be set to 1_B in the following read (either update read or normal read) unless a new value is available. Reset: 1_B
ANG_SPD	14:0	ru	**Calculated Angle Speed** Signed value, where the sign bit [14] indicates the direction of the rotation. Without prediction difference between the current unpredicted angle value and second-to-last unpredicted angle values. $$Speed\ [°/s] = \frac{\frac{AngleRange\ [°]}{2^{15}} ANG\_SPD\ [digits]}{2t_{upd}\ [s]} \quad (6.5)$$ With prediction, difference between the current predicted value and second-to-last unpredicted angle value. $$Speed\ [°/s] = \frac{\frac{AngleRange\ [°]}{2^{15}} ANG\_SPD\ [digits]}{3t_{upd}\ [s]} \quad (6.6)$$ Reset: 0_H

Angle Revolution Register

AREV	Offset	Reset Value
Angle Revolution Register	04_H	8000_H

15	14	9	8
RD_REV	FCNT		REVOL
ru	wu		ru

7	0
REVOL	
ru	

Field	Bits	Type	Description
RD_REV	15	r	**Read Status, Revolution** 0_B no new values since last readout 1_B new value (REVOL) present. The bit is cleared on a read-out (volid for both: normal operation and update buffer). Note: If an update event (register snapshot) is done after a normal read, RD_REV will not be set to 1_B in the following read (either update read or normal read) unless a new value is available. Reset: 1_B
FCNT	14:9	wu	**Frame Counter (unsigned 6-bit value)** Internal frame counter. Increments every update period (FIR_MD setting). Reset: 0_H
REVOL	8:0	ru	**Number of Revolutions (signed 9-bit value)** Revolution counter. Increments for every full rotation in counter-clockwise direction (at angle discontinuity from 360° to 0°) and decrements for every full rotation in clockwise direction (at angle discontinuity from 0° to 360°). Also see **Chapter 4.2**. Reset: 0_H

Frame Synchronization Register

FSYNC	Offset	Reset Value
Frame Synchronization Register	05_H	0000_H

15						9	8
FSYNC							TEMPER
wu							ru

7							0
TEMPER							
ru							

Field	Bits	Type	Description
FSYNC	15:9	wu	**Frame Synchronization Counter Value** Subcounter within one frame. Increments every internal clock cycle (synchronously at a 750kHz rate). Maximum counter value depends on FIR_MD setting: 16 @ FIR_MD=00; 32 @ FIR_MD=01; 64 @ FIR_MD=10; 128 @ FIR_MD=11. Reset: 0_H
TEMPER	8:0	ru	**Temperature Value** Signed offset compensated temperature value. Saturated below approx. -30°C and above approx. +140°C. Compensation done by DSPU from T_RAW and the offset temperature T25O. T[°C] = (TEMPER[dig]+161[dig]) / 2.776[dig/°C] For reference point on the real temperature the voltage via the ESD diode at V_{DD} pin is used. This introduces some variation from device to device. After characterization, a 9-bit correction is considered more accurate to extract the temperature: T[°C] = (TEMPER[dig]+152[dig]) / 2.776[dig/°C] Reset: 0_H

Interface Mode1 Register

MOD_1	Offset	Reset Value
Interface Mode1 Register	06_H	derivate-specific

15	14	13					8
FIR_MD		Res					
w							

7		5	4	3	2	1	0
Res			CLK_SEL	Res	DSPU_HOLD	IIF_MOD	
			w		w	w	

Field	Bits	Type	Description
FIR_MD	15:14	w	**Update Rate Setting (Filter Decimation)** 01_B 42.7 µs 10_B 85.3 µs 11_B 170.6 µs Reset: derivate-specific
CLK_SEL	4	w	**Clock Source Select** Switch to external clock at start-up only. If there is no clock signal on the IFC pin when the chip is switched to the external clock source, the chip does not allow the switch (CLK_SEL remains zero, operation continued). If the external clock disappears with CLK_SEL already set, the chip will reset (PLL out of lock) and run on with the internal clock. 0_B internal oscillator 1_B external 4-MHz clock (IFC pin switched to input) Reset: 0_B
DSPU_HOLD	2	w	**Hold DSPU Operation**[1)] If DSPU is on hold, no watchdog reset is performed by DSPU. Deactivate watchdog with AS_WD before setting DSPU on hold. 0_B DSPU in normal schedule operation 1_B DSPU is on hold Reset: 0_B
IIF_MOD	1:0	w	**Incremental Interface Mode** 00_B IIF disabled 01_B A/B operation with Index on IFC pin 10_B Step/Direction operation with Index on IFC pin 11_B not allowed Reset: derivate-specific

1) DSPU_HOLD is ignored in PWM or SPC mode.

External Clock Selection:

External clock operation is possible for the interface configurations SSC only, SSC & PWM, and SSC& SPC. To switch the TLE5012B to external clock, the following procedure is used:

- Trigger a chip reset by writing a “1” to the AS_RST bit (address 01_H[0]) via SSC interface
- Within 120 µs after the reset command, write a “1” to the CLK_SEL bit (address 06_H[4])
- After the power-on time (max. 7 ms), read the CLK_SEL bit via SSC interface to confirm that external clock is selected

Note: If the clock source (CLK_SEL) bit is switched to external clock during operation of the sensor without a reset it may occur, due to an internal timing conflict, that the switching command is not accepted and the chip keeps operating on internal clock.

SIL Register

SIL	**Offset**	**Reset Value**
SIL Register	**07_H**	**0000_H**

15	14	13		11	10	9	8
FILT_PAR	**FILT_INV**	Res			**FUSE_REL**	Res	
w	w				w		

7	6	5		3	2		0
Res	**ADCTV_EN**	**ADCTV_Y**			**ADCTV_X**		
	w		w			w	

Field	Bits	Type	Description
FILT_PAR	15	w	**Filter Parallel** Diagnostic function to test ADCs’ filter. If enabled, the raw X-signal is routed also to the raw Y-signal input of the filter so SIN and COS signal should be identical. 0_B filter parallel disabled 1_B filter parallel enabled (source: X-value) Reset: 0_B
FILT_INV	14	w	**Filter Inverted** Diagnostic function to test ADCs’ filter. If enabled, the X- and Y-signals are inverted. The angle output is then shifted by 180°. 0_B filter inverted disabled 1_B filter inverted enabled Reset: 0_B

Field	Bits	Type	Description
FUSE_REL	10	w	**Fuse Reload** Triggers reload of default values from laser fuses into configuration registers. 0_B normal operation 1_B reload of registers with fuse values immediately. Reloaded fuse values are used with the start of the next filter cycle. Reset: 0_B
ADCTV_EN	6	w	**ADC-Test Vectors** Diagnostic function to test ADCs. If enabled, sensor elements are internally disconnected and test voltages are connected to ADCs. NO_GMR_A and NO_GMR_XY status flags will be set to “1”, if this bit is set during operation. Test vectors can be selected via the register ADCTV_Y and ADCTV_X. 0_B ADC-Test Vectors disabled 1_B ADC-Test Vectors enabled Reset: 0_B
ADCTV_Y	5:3	w	**Test vector Y** 000_B 0V 001_B +70% 010_B +100% 011_B +Overflow 101_B -70% 110_B -100% 111_B -Overflow Reset: 0_H
ADCTV_X	2:0	w	**Test vector X** 000_B 0V 001_B +70% 010_B +100% 011_B +Overflow 101_B -70% 110_B -100% 111_B -Overflow Reset: 0_H

Interface Mode2 Register

MOD_2	Offset	Reset Value
Interface Mode2 Register	08_H	derivate-specific

15	14						8
Res	ANG_RANGE						
				w			

7			4	3	2	1	0
ANG_RANGE				ANG_DIR	PREDICT	AUTOCAL	
	w			w	w	w	

Field	Bits	Type	Description
ANG_RANGE	14:4	w	**Angle Range**[1)] Changes the representation of the angle output (AVAL and ASPD register) by multiplying the output with a factor ANG_RANGE/128. 080_H factor 1 (default), magnetic angle -180°..180° mapped to values -16384..16383 200_H factor 4, magnetic angle -45°..45° mapped to values -16384..16383. Values outside this range are clamped to the limit value and S_OV flag is set. 040_H factor 0.5, magnetic angle -180°..180° mapped to values -8192..8191) Reset: 080_H
ANG_DIR	3	w	**Angle Direction** Inverts angle and angle speed values and revolution counter behaviour. *Note: In case of changing ANG_DIR, AUTOCAL should be deactivated as explained under* ***Note on Page 23****.* 0_B counterclockwise rotation of magnet 1_B clockwise rotation of magnet Reset: 0_B

Field	Bits	Type	Description
PREDICT	2	w	**Prediction** Prediction of angle value based on current angle speed (see data sheet). *Note: In case of changing a PREDICT, AUTOCAL should be deactivated as explained under* ***Note on Page 23****.* 0_B prediction disabled 1_B prediction enabled Reset: derivate-specific
AUTOCAL	1:0	w	**Autocalibration Mode** Automatic calibration of offset and amplitude synchronicity for applications with full-turn. Only 1 LSB corrected at each update. CRC check of calibration registers is automatically disabled if AUTOCAL activated. Autocalibration is described in the data sheet. Also see **Chapter 4.1**. 00_B no auto-calibration 01_B auto-cal. mode 1: update every angle update cycle (FIR_MD setting) 10_B auto-cal. mode 2: update every 1.5 revolutions 11_B auto-cal. mode 3: update every 11.25° Reset: derivate-specific

1) Autocalibration and Revolution Counter work only for ANG_RANGE = 080_H. Activated autocalibration forces 360° angle range regardless of ANG_RANGE setting.

Interface Mode3 Register

MOD_3	Offset	Reset Value
Interface Mode3 Register	09_H	device-specific

15							8
ANG_BASE							
w							

7			4	3	2	1	0
ANG_BASE				SPIKEF	SSC_OD	PAD_DRV	
w				w	w	w	

Field	Bits	Type	Description
ANG_BASE	15:4	w	**Angle Base** Sets the 0° angle position (12 bit value). Angle base is factory-calibrated to make the 0° direction parallel to the edge of the chip. 800_H -180° 000_H 0° $7FF_H$ +179.912° Reset: device-specific
SPIKEF	3	w	**Analog Spike Filter of Input Pads** Filters voltage spikes on input pads (IFC, SCK and CSQ). Additional delay of 10 µs for data input. 0_B spike filter disabled 1_B spike filter enabled Reset: derivate-specific
SSC_OD	2	w	**SSC-Interface Data Pin Output Mode** 0_B Push-Pull 1_B Open Drain Reset: 0_B
PAD_DRV	1:0	w	**Configuration of Pad-Driver** 00_B IFA/IFB/IFC: strong driver, DATA: strong driver, fast edge 01_B IFA/IFB/IFC: strong driver, DATA: strong driver, slow edge 10_B IFA/IFB/IFC: weak driver, DATA: medium driver, fast edge 11_B IFA/IFB/IFC: weak driver, DATA: weak driver, slow edge Reset: derivate-specific

Offset X Register

OFFX Offset X	Offset $0A_H$	Reset Value device-specific

15							8
X_OFFSET							
w							

7			4	3			0
X_OFFSET				Res			
		w					

Field	Bits	Type	Description
X_OFFSET	15:4	w	**Offset Correction of X-value in digits** 12-bit signed integer value of raw X-signal offset correction at 25°C. Reset: device-specific

Offset Y Register

OFFY Offset Y	Offset $0B_H$	Reset Value device-specific

15							8
Y_OFFSET							
w							

7			4	3			0
Y_OFFSET				Res			
		w					

Field	Bits	Type	Description
Y_OFFSET	15:4	w	**Offset Correction of Y-value in digits** 12-bit signed integer value of raw Y-signal offset correction at 25°C. Reset: device-specific

Synchronicity Register

SYNCH	Offset	Reset Value
Synchronicity	$0C_H$	device-specific

15							8
SYNCH							
w							

7			4	3			0
SYNCH				Res			
w							

Field	Bits	Type	Description
SYNCH	15:4	w	**Amplitude Synchronicity** 12-bit signed integer value of amplitude synchronicity correction (raw X amplitude divided by raw Y amplitude). For synchronicity correction, the offset compensated Y value is multiplied by SYNCH. $+2047_D$ 112.494% 0_D 100% -2048_D 87.500% Reset: device-specific

IFAB Register (multi-purpose)

IFAB	Offset	Reset Value
IFAB Register	$0D_H$	device-specific

15							8
ORTHO							
w							

7			4	3	2	1	0
ORTHO				FIR_UDR	IFAB_OD	IFAB_HYST	
w				w	w	w	

Field	Bits	Type	Description
ORTHO	15:4	w	**Orthogonality Correction of X and Y Components** 12-bit signed integer value of orthogonality correction. GMR element orthogonality correction. $+2047_D$ 11.2445° 0_D 0° -2048_D -11.2500° Reset: device-specific
FIR_UDR	3	w	**FIR Update Rate** Initial filter update rate (FIR) setting to be loaded into FIR_MD on startup. Changing of the FIR setting can only be done by writing to the FIR_MD bits via SPI after power-on. 0_B FIR_MD = ‘10’ (85.3 µs) 1_B FIR_MD = ‘01’ (42.7 µs) Reset: derivate-specific
IFAB_OD	2	w	**IFA,IFB,IFC Output Mode** 0_B Push-Pull 1_B Open Drain Reset: derivate-specific

Field	Bits	Type	Description
IFAB_HYST (multi-purpose)	1:0	w	**HSM and IIF Mode: Hysteresis** Switching hysteresis on direction change for HSM and IIF interface. 00_B 0° 01_B 0.175° 10_B 0.35° 11_B 0.70° **SPC Mode: Unit Time** 00_B 3.0 µs 01_B 2.5 µs 10_B 2.0 µs 11_B 1.5 µs Reset: derivate-specific

Interface Mode4 Register (multi-purpose)

MOD_4	Offset	Reset Value
Interface Mode4 Register	$0E_H$	device-specific

15						9	8
TCO_X_T							HSM_PLP
			w				w

7		5	4	3	2	1	0
HSM_PLP			IFAB_RES		Res	IF_MD	
	w			w			w

Field	Bits	Type	Description
TCO_X_T	15:9	w	**Offset Temperature Coefficient for X-Component** 7-bit signed integer value of X-offset temperature coefficient. This register is used both with autocalibration and without autocalibration. If autocalibration is deactivated, overwrite only with the default value. If autocalibration is activated, do not write this bitfield. See **“Offset temperature compensation” on Page 97**. Reset: device-specific

Field	Bits	Type	Description
HSM_PLP (multi-purpose)	8:5	w	**Hall Switch Mode: Pole-Pair Configuration** 0000_B 1 pole pairs 0001_B 2 pole pairs 0010_B 3 pole pairs $...B$ ... 1101_B 14 pole pairs 1110_B 15 pole pairs 1111_B 16 pole pairs **Pulse-Width-Modulation Mode: Error Indication** $xx0x_B$ error indication enabled $xx1x_B$ error indication disabled **Incremental Interface Mode: Absolute Count** Interface counts to absolute value at startup $x0xx_B$ absolute count enabled $x1xx_B$ absolute count disabled **SPC Mode: Total Trigger Time** Duration of the master pulse to trigger SPC output 0000_B 90*UT 0100_B t_{mlow} + 12 UT Reset: derivate-specific
IFAB_RES (multi-purpose)	4:3	w	**Pulse-Width-Modulation Mode: Frequency** Selection of PWM frequency. 00_B 244 Hz 01_B 488 Hz 10_B 977 Hz 11_B 1953 Hz **Incremental Interface Mode: IIF resolution** 00_B 12bit, 0.088° step 01_B 11bit, 0.176° step 10_B 10bit, 0.352° step 11_B 9bit, 0.703° step **SPC Mode: SPC Frame Configuration** 00_B 12bit angle 01_B 16bit angle 10_B 12bit angle + 8bit temperature 11_B 16bit angle + 8bit temperature Reset: derivate-specific

Field	Bits	Type	Description
IF_MD	1:0	w	**Interface Mode on IFA,IFB,IFC** Any derivate can be configurated to operate in any of the four following protocols on the IFA, IFB and IFC outputs. Reconfiguration is required at every start-up, else the default protocol of the derivate will be used. SSC interface is always active in parallel on pins SCK, CSQ and DATA. 00_B IIF 01_B PWM 10_B HSM 11_B SPC[1)] Reset: derivate-specific

1) In SPC interface configuration, the sensor's digital signal processing unit (DSPU) runs only when receiving a SPC trigger pulse on the IFA pin (see **Figure 6-12**). This means that changes to register settings are applied and also the angle (AVAL) register is updated only after a trigger pulse.

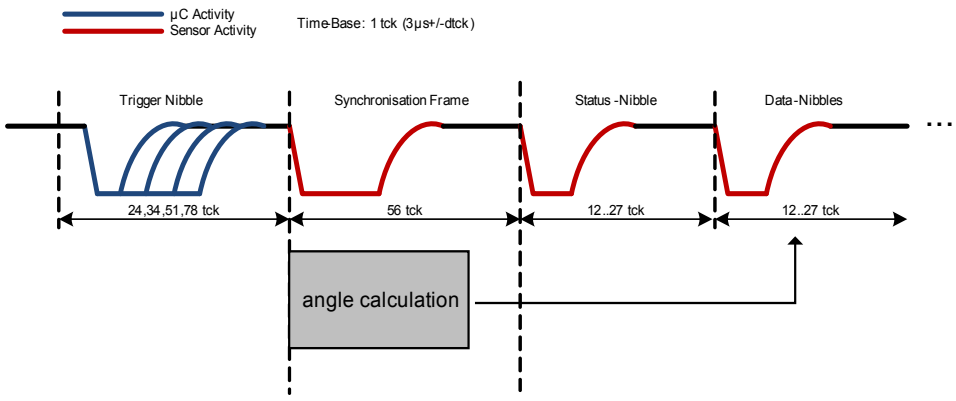

Figure 6-12 Timing of angle calculation in SPC. Trigger Nibble low time corresponds to slave number.

Temperature Coefficient Register

TCO_Y	Offset	Reset Value
Temperature Coefficient Register	$0F_H$	device-specific

15 … 9	8	7 … 0
TCO_Y_T	SBIST	CRC_PAR
w	w	w

Field	Bits	Type	Description
TCO_Y_T	15:9	w	**Offset Temperature Coefficient for Y-Component** 7-bit signed integer value of Y-offset temperature coefficient. This register is used both with autocalibration and without autocalibration. If autocalibration is deactivated, overwrite only with the default value. If autocalibration is activated, do not write this bitfield. See **"Offset temperature compensation" on Page 97**. Reset: device-specific
SBIST	8	w	**Startup-BIST** 0_B Startup-BIST disabled 1_B Startup-BIST enabled Reset: 1_B
CRC_PAR	7:0	w	**CRC of Parameters** CRC of parameters from address 08_H to $0F_H$. If any settings within these registers are changed, this CRC has to be changed accordingly. Reset: device-specific

Offset temperature compensation

The TLE5012B compensates the temperature dependence of the X- and Y-offsets during run-time by using an integrated temperature measurement (see register TEMPER on **Page 84**) and applying factory-calibrated temperature coefficients for the offsets. At a chip temperature of T, the resulting offset correction parameters are given by:

$$\text{Offset\_X/Y[T]} = \text{Offset\_X/Y[25°C]} + (\text{TCO\_X/Y\_T}*(\text{TEMPER[T]-TEMPER[25°C]}))/128 \tag{6.7}$$

Temperature compensation of the offsets is only active, if autocalibration is disabled. If auto-calibration is enabled, TCO_X_T and TCO_Y_T are automatically set to 0. Once auto-calibration is deactivated, laser-fused calibration values are loaded into TCO_X_T and TCO_Y_T.

X-raw Value Register

ADC_X	Offset	Reset Value
X-raw value	10_H	0000_H

15															0
ADC_X															
r															

Field	Bits	Type	Description
ADC_X	15:0	r	**ADC value of X-GMR** 16-bit signed integer raw X value. Read-out of this register will update ADC_Y Reset: 0_H

Y-raw Value Register

ADC_Y	Offset	Reset Value
Y-raw value	11_H	0000_H

15															0
ADC_Y															
r															

Field	Bits	Type	Description
ADC_Y	15:0	r	**ADC value of Y-GMR** 16-bit signed integer raw Y value. Updated when ADC_X or ADC_Y is read. Reset: 0_H

D_MAG Register

D_MAG	Offset	Reset Value
D_MAG Register	14_H	0000_H

15	14	13	12	11	10	9	8
Res						MAG	
						ru	

7	6	5	4	3	2	1	0
MAG							
ru							

Field	Bits	Type	Description
MAG	9:0	ru	**Angle Vector Magnitude** Unsigned Angle Vector Magnitude after X, Y error compensation (due to temperature). This field allows additional safety checks. Formula: MAG = (SQRT(X*X+Y*Y))/64 Reset: 0_H

T_RAW Register

T_RAW	Offset	Reset Value
T_RAW Register	15_H	0000_H

15	14	13	12	11	10	9	8
T_TGL	Res					T_RAW	
ru						ru	

7	6	5	4	3	2	1	0
T_RAW							
ru							

Field	Bits	Type	Description
T_TGL	15	ru	**Temperature Sensor Raw-Value Toggle** Toggles after every new temperature value (T_RAW). Reset: 0_B
T_RAW	9:0	ru	**Temperature Sensor Raw-Value** Temperature at ADC. This value is not compensated with the offset temperature. T_RAW range is not limited as TEMPER. T_RAW is an unsigned value. T[°C]=(T_RAW[dig]-369[dig]-T25O[dig]) / 2.776[dig/°C] Reset: 0_H

Increment Counter Register

IIF_CNT	Offset	Reset Value
IIF Counter value	20_H	0000_H

15	14	13		0
Res		IIF_CNT		
		ru		

Field	Bits	Type	Description
IIF_CNT	13:0	ru	**Counter value of increments** Internal 14-bit counter for the incremental interface, which counts from 0 to 16383 during one full turn. It can be used for synchronization purposes between sensor and counter value on microcontroller side. Therefore, depending on the setting of the IFAB_RES register (9bit to 12bit resolution of incremental interface), 2 to 5 LSBs have to be removed from IIF_CNT for the synchronization. Reset: 0_H

Temperature 25°C offset value

T25O	Offset	Reset Value
Temperature 25°C Offset value	30_H	device-specific

15	14	13	12	11	10	9	8
T25O							Res
r			r				
7	**6**	**5**	**4**	**3**	**2**	**1**	**0**
Res							

Field	Bits	Type	Description
T25O	15:9	r	**Temperature 25°C Offset value** Signed offset value at 25°C temperature; 1dig=0.36°C. T25O = T_RAW(@25°C)[dig]-439[dig]. Reset: device-specific

7 Pre-Configured Derivates

Derivates of the TLE5012B are available with different pre-configured register settings for specific applications. The default configuration of all derivates is described below (see **Chapter 7.6** for the respective fuse configuration) and can be changed at start-up via SSC interface.

7.1 IIF-type: E1000

The TLE5012B E1000 is preconfigured for Incremental Interface and fast angle update rate (42.7 µs). It is most suitable for BLDC motor commutation.

- Incremental Interface A/B mode.
- 12bit mode, one count per 0.088° angle step.
- Absolute count enabled.
- Autocalibration mode 1 enabled.
- Prediction disabled.
- Hysteresis set to 0.703°.
- IFA/IFB/IFC pins set to push-pull output.
- SSC interface's DATA pin set to push-pull output.
- IFA/IFB/IFC pins set to strong driver, DATA pin set to strong driver, fast edge.
- Voltage spike filter on input pads disabled.

7.2 HSM-type: E3005

The TLE5012B E3005 is preconfigured for Hall-Switch-Mode and fast angle update rate (42.7 µs). It is most suitable as a replacement for three Hall switches for BLDC motor commutation.

- Number of pole pairs is set to 5.
- Autocalibration mode 1 enabled.
- Prediction enabled.
- Hysteresis set to 0.703°.
- IFA (HS1)/IFB (HS2)/IFC (HS3) pins set to push-pull output.
- SSC interface's DATA pin set to push-pull output.
- IFA/IFB/IFC pins set to strong driver, DATA pin set to strong driver, fast edge.
- Voltage spike filter on input pads disabled.

7.3 PWM-type: E5000

The TLE5012B E5000 is preconfigured for Pulse-Width-Modulation interface. It is most suitable for steering angle and actuator position sensing.

- PWM frequency is 244 Hz.
- Filter update time is 85.4 µs.
- Error indication enabled.
- Autocalibration disabled
- Prediction disabled
- Hysteresis disabled.
- IFA (PWM) pin set to push-pull output.
- SSC interface's DATA pin set to push-pull output.
- IFA/IFB/IFC pins set to weak driver, DATA pin set to medium driver, fast edge.
- Voltage spike filter on input pads enabled.

7.4 PWM-type: E5020

The TLE5012B E5020 is preconfigured for Pulse-Width-Modulation interface with high frequency. It is most suitable for steering angle and actuator position sensing.

- PWM frequency is 1953 Hz.
- Filter update time is 42.7 µs.
- Error indication enabled
- Autocalibration mode 2 enabled.
- Prediction disabled
- Hysteresis disabled.
- IFA (PWM) pin set to open-drain output.
- SSC interface's DATA pin is set to push-pull output.
- IFA/IFB/IFC pins set to weak driver, DATA pin set to medium driver, fast edge.
- Voltage spike filter on input pads enabled.

7.5 SPC-type: E9000

The TLE5012B E9000 is preconfigured for Short-PWM-Code interface. It is most suitable for steering angle and actuator position sensing.

- SPC unit time is 3 µs.
- Duration of the master pulse to trigger SPC output is 90*UT.
- 12-bit angle resolution.
- Filter update time is 85.4 µs.
- Autocalibration disabled
- Prediction disabled
- Hysteresis disabled.
- IFA (SPC) pin set to open-drain output.
- SSC interface's DATA pin set to push-pull output.
- IFA/IFB/IFC pins set to weak driver, DATA pin set to medium driver, fast edge.
- Voltage spike filter on input pads enabled.

7.6 Fuse Values

The derivate specific reset values for the configuration registers, which are stored in laser fuses on the sensor, are shown in **Figure 7-1**.

	Interface Mode2 Register															Interface Mode3 Register			
	ANG_RANGE											ANG_DIR	PREDICT	AUTOCAL		SPIKEF	SSC_OD	PAD_DRV	
TLE5012B E1000 (IIF)	0	0	0	1	0	0	0	0	0	0	0	0	0	0	1	0	0	0	0
TLE5012B E3005 (HSM)	0	0	0	1	0	0	0	0	0	0	0	0	1	0	1	0	0	0	0
TLE5012B E5000 (PWM)	0	0	0	1	0	0	0	0	0	0	0	0	0	0	0	1	0	1	0
TLE5012B E5020 (PWM)	0	0	0	1	0	0	0	0	0	0	0	0	0	1	0	1	0	1	0
TLE5012B E9000 (SPC)	0	0	0	1	0	0	0	0	0	0	0	0	0	0	0	1	0	1	0
	msb										*lsb*			*msb*	*lsb*			*msb*	*lsb*

	Temp. Coeff. Reg.	IFAB Register				Interface Mode4 Register							
	SBIST	FIR_UDR	IFAB_OD	IFAB_HYST		HSM_PLP				IFAB_RES		IF_MD	
TLE5012B E1000 (IIF)	1	1	0	1	1	0	0	0	1	0	0	0	0
TLE5012B E3005 (HSM)	1	1	0	1	1	0	1	0	0	0	0	1	0
TLE5012B E5000 (PWM)	1	0	0	0	0	0	0	0	0	0	0	0	1
TLE5012B E5020 (PWM)	1	1	1	0	0	0	0	0	0	1	1	0	1
TLE5012B E9000 (SPC)	1	0	1	0	0	0	0	0	0	0	0	1	1
				msb	*lsb*	*msb*			*lsb*	*msb*	*lsb*	*msb*	*lsb*

	Interface Mode1 Register					
	FIR_MD		CLK_SEL	DSPU_HOLD	IIF_MOD	
TLE5012B E1000 (IIF)	0	1	0	0	0	1
TLE5012B E3005 (HSM)	0	1	0	0	0	0
TLE5012B E5000 (PWM)	1	0	0	0	0	0
TLE5012B E5020 (PWM)	0	1	0	0	0	0
TLE5012B E9000 (SPC)	1	0	0	0	0	0
	msb					*lsb*

Figure 7-1 Derivate-specific fuse settings

w w w . i n f i n e o n . c o m

Published by Infineon Technologies AG