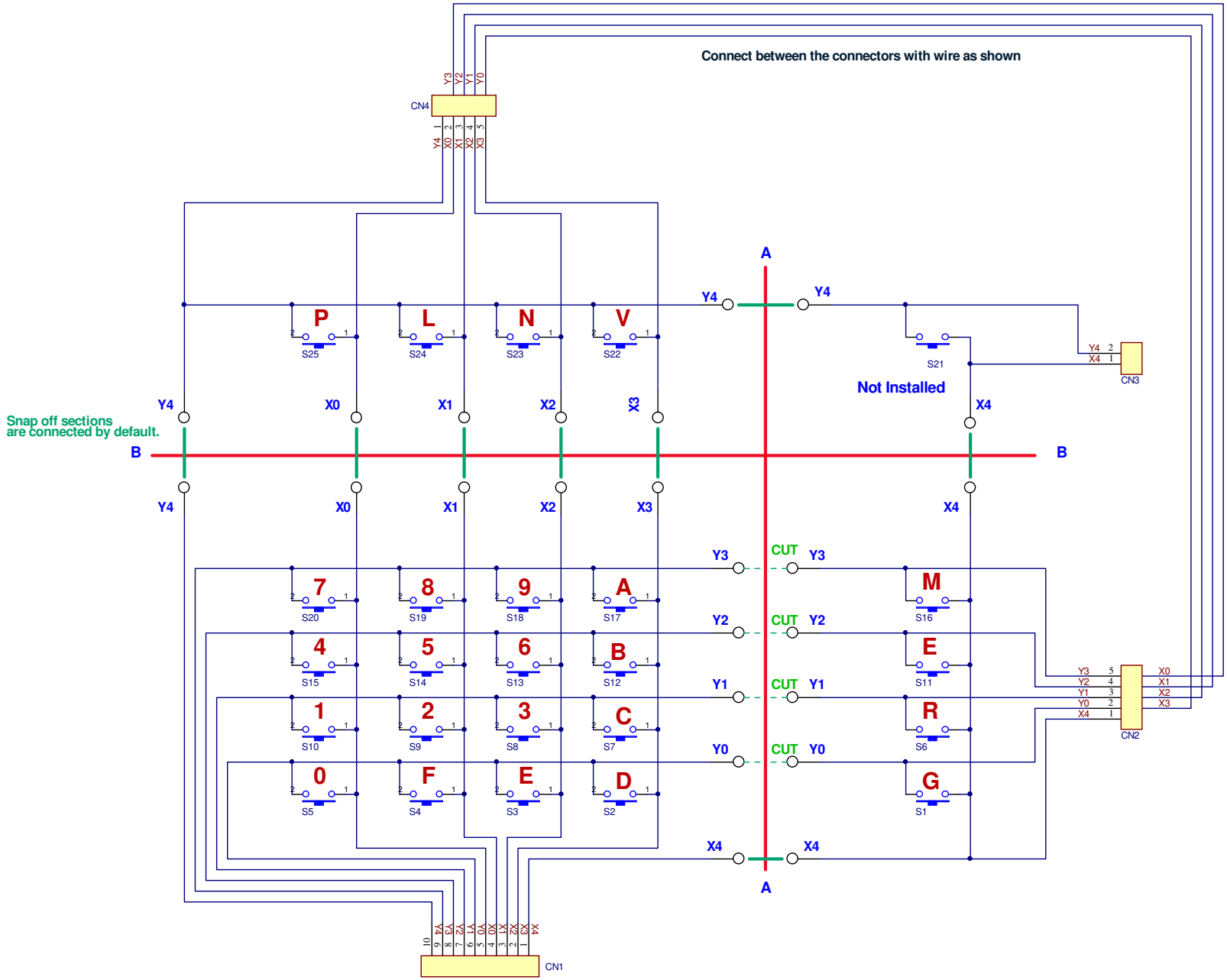

Use the PCB Upside Down (CN1 at the bottom)

Title **68Retro** *MEK6800D2 Keyboard*		
Size: **A3**	Number:	Revision: **2**
Date: 5/07/2024 Time: 8:04:37 PM		Sheet 1 of 1
File: MEK6800D2-KB-01.SchDoc		