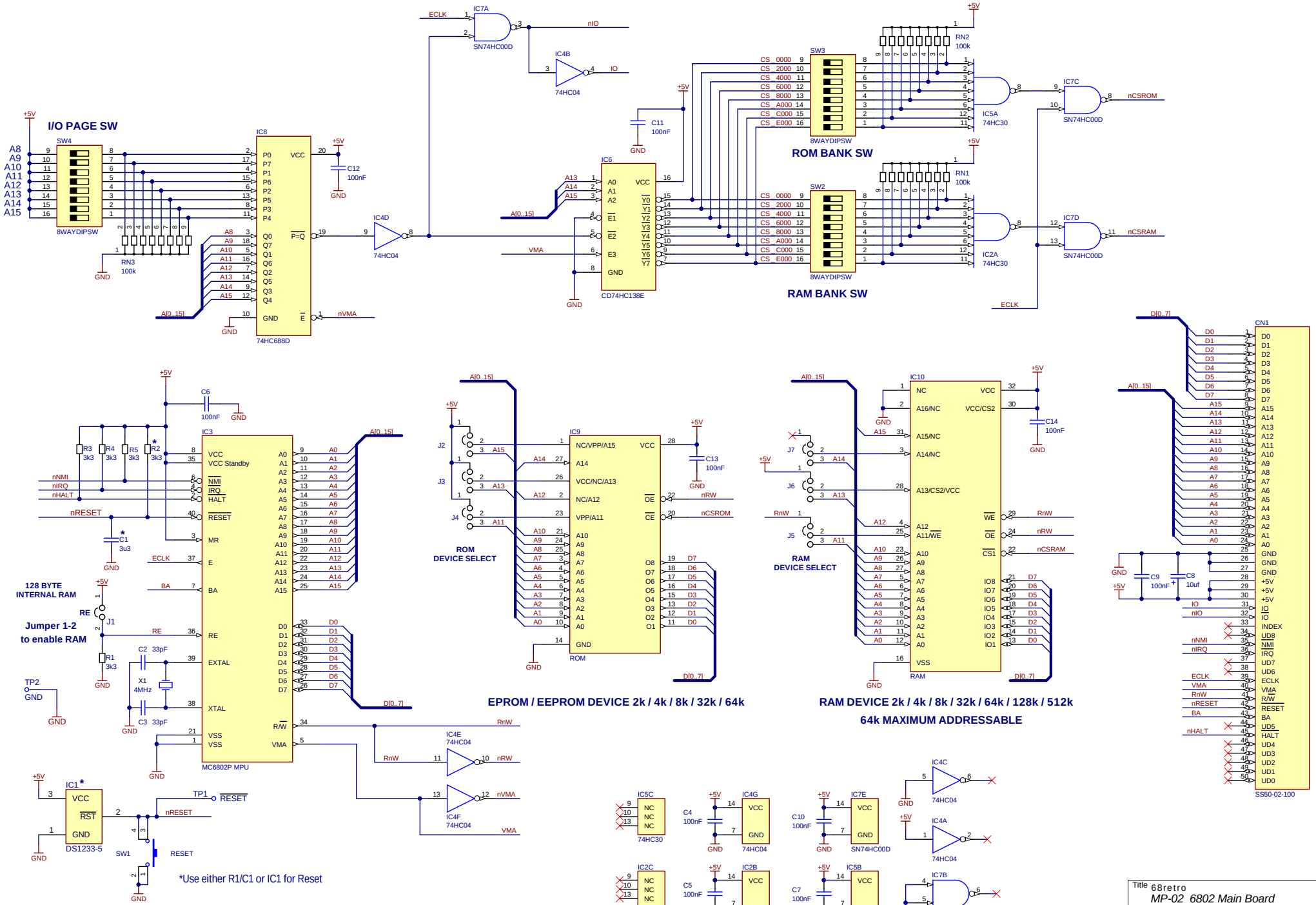
I/O PAGE SW
SW4
8WAYDIPSW
RN3
100k
IC8
74HC688D
IC7A
SN74HC00D
IC4B
74HC04
IC4D
74HC04
IC6
CD74HC138E
C11
100nF
C12
100nF
SW3
8WAYDIPSW
ROM BANK SW
SW2
8WAYDIPSW
RAM BANK SW
RN2
100k
RN1
100k
IC5A
74HC30
IC2A
74HC30
IC7C
SN74HC00D
IC7D
SN74HC00D
nCSROM
nCSRAM
ECLK
nIO
IO
VMA
nVMA
A[0..15]
D[0..7]
CN1
SS50-02-100
IC3
MC6802P MPU
128 BYTE
INTERNAL RAM
Jumper 1-2
to enable RAM
J1
RE
TP2
GND
X1
4MHz
C2 33pF
C3 33pF
C6
100nF
R1 3k3
R2 3k3
R3 3k3
R4 3k3
R5 3k3
C1 3u3
nNMI
nIRQ
nHALT
nRESET
IC9
ROM
ROM
DEVICE SELECT
C13
100nF
IC10
RAM
RAM
DEVICE SELECT
C14
100nF
C9
100nF
C8
10uf
EPROM / EEPROM DEVICE 2k / 4k / 8k / 32k / 64k
RAM DEVICE 2k / 4k / 8k / 32k / 64k / 128k / 512k
64k MAXIMUM ADDRESSABLE
IC1*
DS1233-5
TP1
RESET
SW1
RESET
*Use either R1/C1 or IC1 for Reset
IC4E
74HC04
IC4F
74HC04
IC5C
74HC30
IC2C
74HC30
IC4G
74HC04
IC2B
74HC30
IC7E
SN74HC00D
IC5B
74HC30
IC4C
74HC04
IC4A
74HC04
IC7B
SN74HC00D
C4
100nF
C5
100nF
C10
100nF
C7
100nF
craigrsjones@gmail.com
Title 68retro
MP-02 6802 Main Board
Size: A3
Number:
Revision: 3
Date: 5/11/2023
Time: 5:11:58 PM
Sheet 1 of 1
File: MP-02_03.SchDoc