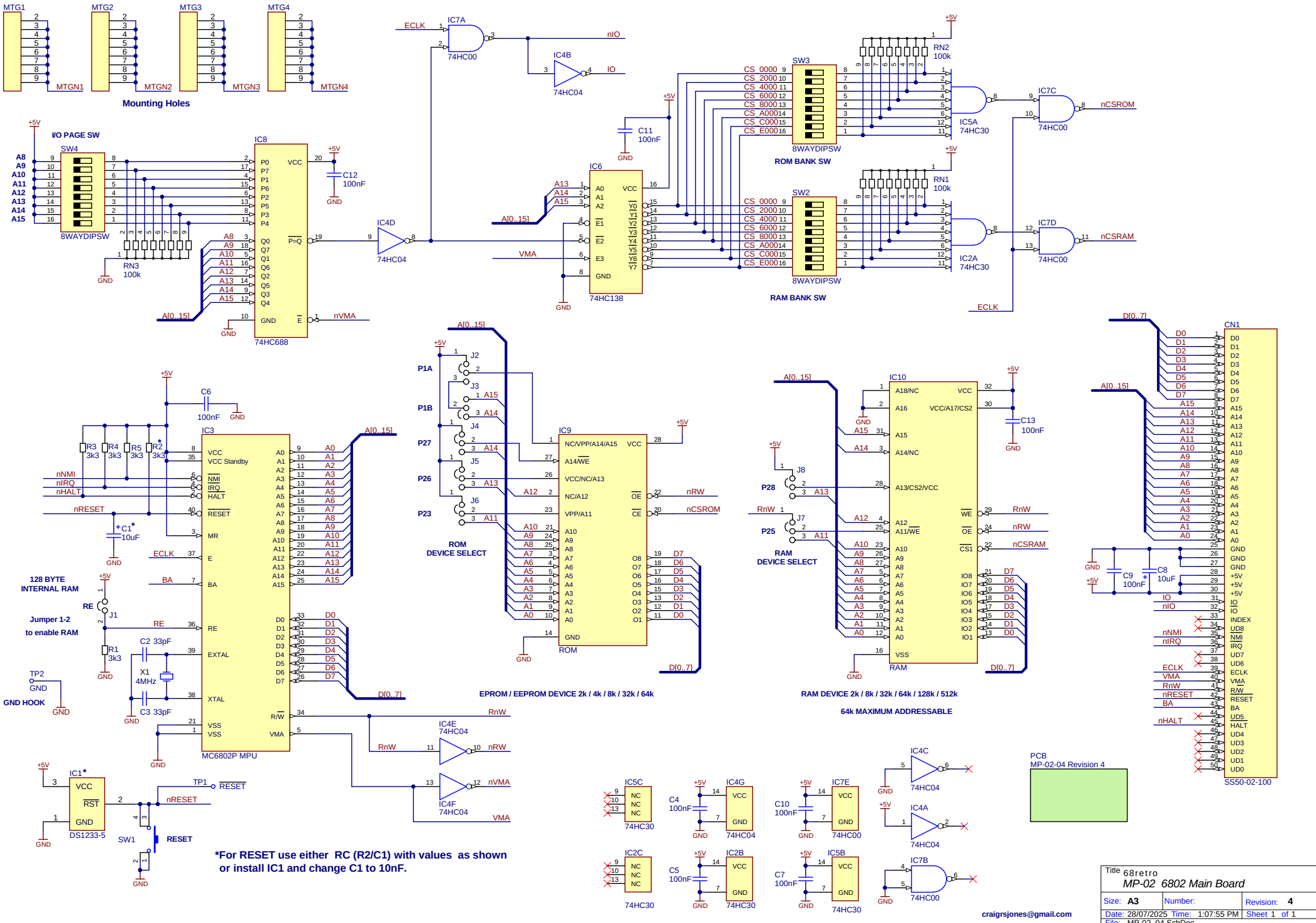

Mounting Holes
MTG1
MTG2
MTG3
MTG4
MTGN1
MTGN2
MTGN3
MTGN4
I/O PAGE SW
SW4
8WAYDIPSW
RN3
100k
IC8
74HC688
C12
100nF
IC4D
74HC04
IC7A
74HC00
IC4B
74HC04
ECLK
nIO
IO
C11
100nF
IC6
74HC138
A[0..15]
VMA
SW3
8WAYDIPSW
ROM BANK SW
RN2
100k
IC5A
74HC30
IC7C
74HC00
nCSROM
SW2
8WAYDIPSW
RAM BANK SW
RN1
100k
IC2A
74HC30
IC7D
74HC00
nCSRAM
ECLK
CN1
SS50-02-100
D[0..7]
C6
100nF
IC3
MC6802P MPU
R3 3k3
R4 3k3
R5 3k3
R2* 3k3
nNMI
nIRQ
nHALT
nRESET
C1* 10uF
128 BYTE INTERNAL RAM
Jumper 1-2 to enable RAM
J1
R1 3k3
C2 33pF
X1 4MHz
C3 33pF
TP2
GND HOOK
IC1*
DS1233-5
TP1
SW1
RESET
IC4E
74HC04
IC4F
74HC04
RnW
nRW
nVMA
VMA
P1A
P1B
P27
P26
P23
J2
J3
J4
J5
J6
ROM DEVICE SELECT
IC9
ROM
nRW
nCSROM
EPROM / EEPROM DEVICE 2k / 4k / 8k / 32k / 64k
IC10
RAM
C13
100nF
J8
J7
P28
P25
RAM DEVICE SELECT
RAM DEVICE 2k / 8k / 32k / 64k / 128k / 512k
64k MAXIMUM ADDRESSABLE
C9
100nF
C8
10uF
PCB
MP-02-04 Revision 4
IC5C
74HC30
IC2C
74HC30
C4
100nF
C5
100nF
IC4G
74HC04
IC2B
74HC30
C10
100nF
C7
100nF
IC7E
74HC00
IC5B
74HC30
IC4C
74HC04
IC4A
74HC04
IC7B
74HC00
*For RESET use either RC (R2/C1) with values as shown or install IC1 and change C1 to 10nF.
craigrsjones@gmail.com
Title 68retro
MP-02 6802 Main Board
Size: A3
Number:
Revision: 4
Date: 28/07/2025
Time: 1:07:55 PM
Sheet 1 of 1
File: MP-02_04.SchDoc