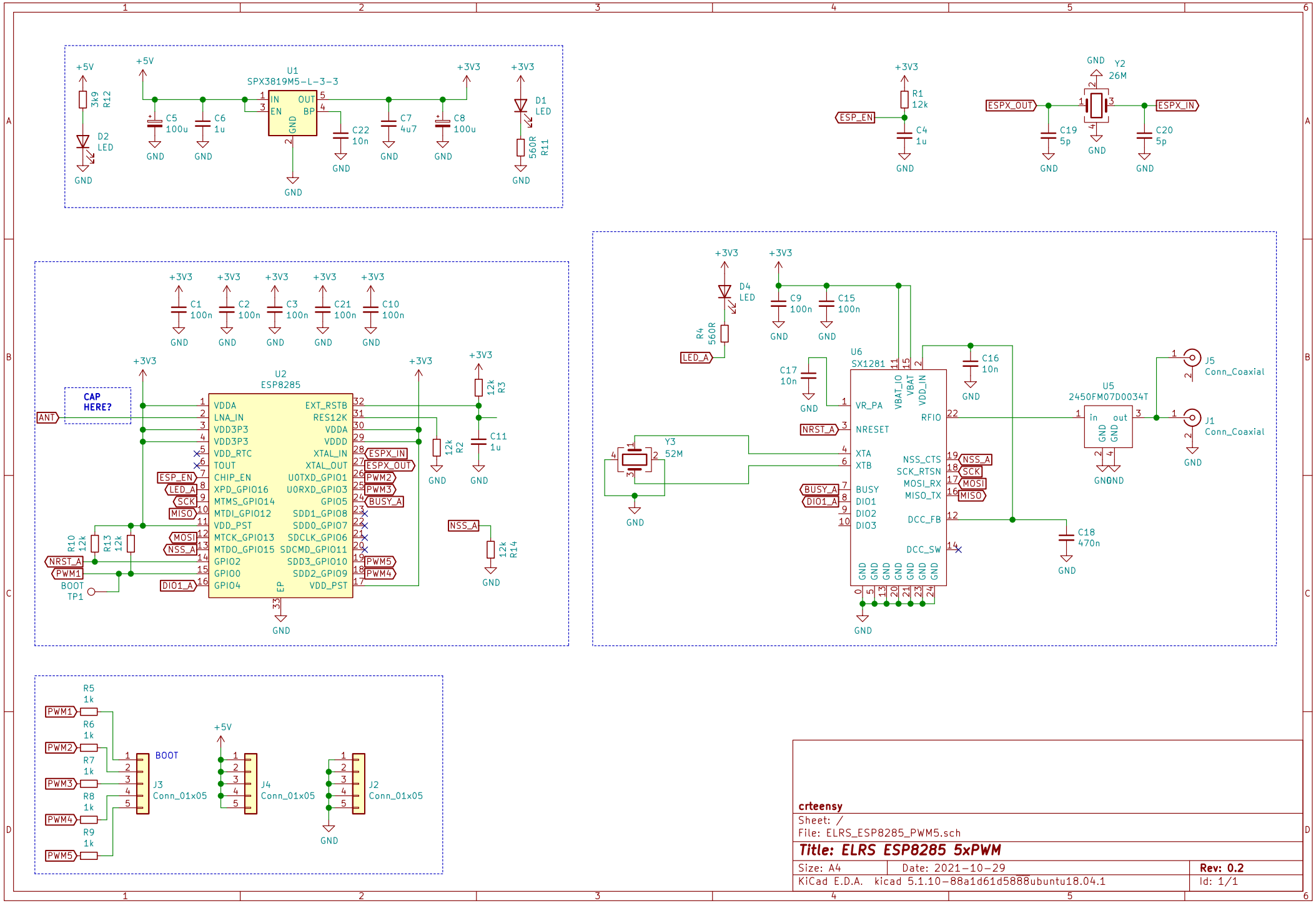

crteensy

Sheet: /

File: ELRS_ESP8285_PWM5.sch

Title: ELRS ESP8285 5xPWM

Size: A4	Date: 2021-10-29	Rev: 0.2
KiCad E.D.A. kicad 5.1.10-88a1d61d5888ubuntu18.04.1		Id: 1/1