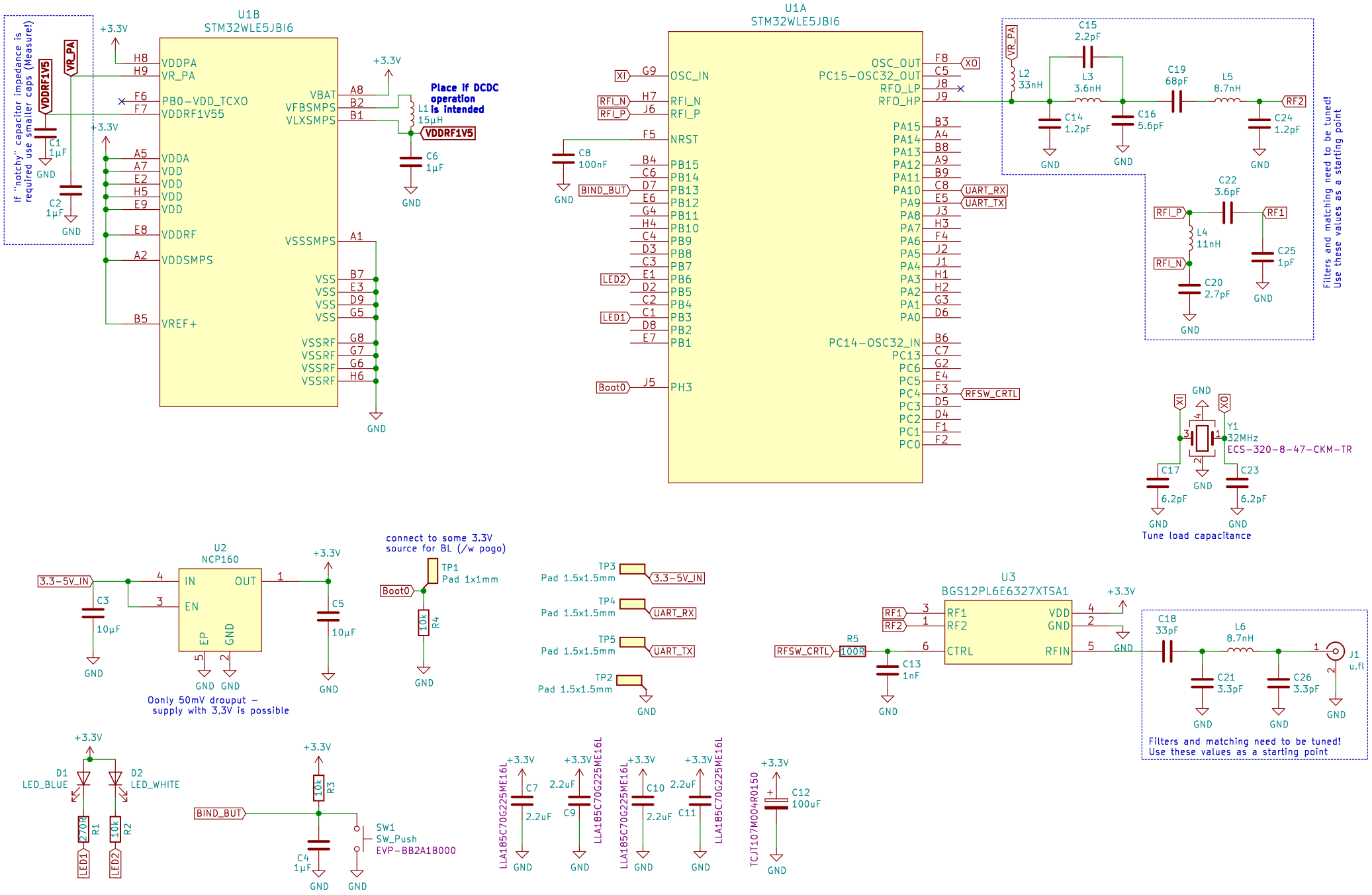
U1B
STM32WLE5JBI6
U1A
STM32WLE5JBI6
If "notchy" capacitor impedance is required use smaller caps (Measure!)
Place if DCDC operation is intended
Filters and matching need to be tuned! Use these values as a starting point
Tune load capacitance
Y1 32MHz ECS-320-8-47-CKM-TR
U2 NCP160
Oonly 50mV drouput - supply with 3.3V is possible
connect to some 3.3V source for BL (/w pogo)
TP1 Pad 1x1mm
TP3 Pad 1.5x1.5mm
TP4 Pad 1.5x1.5mm
TP5 Pad 1.5x1.5mm
TP2 Pad 1.5x1.5mm
U3
BGS12PL6E6327XTSA1
Filters and matching need to be tuned! Use these values as a starting point
D1 LED_BLUE
D2 LED_WHITE
SW1 SW_Push EVP-BB2A1B000
LLA185C70G225ME16L
TCJ107M004R0150