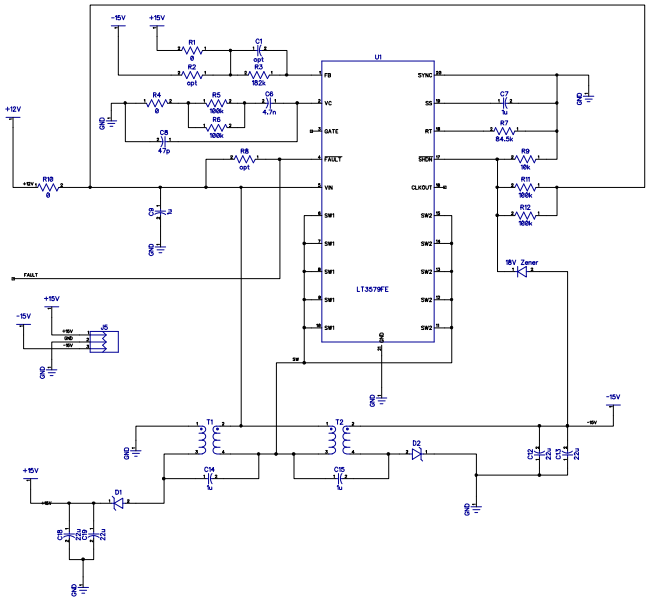

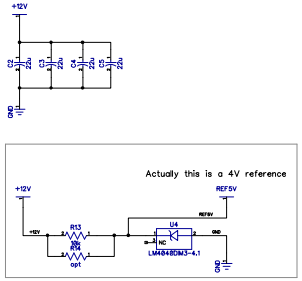

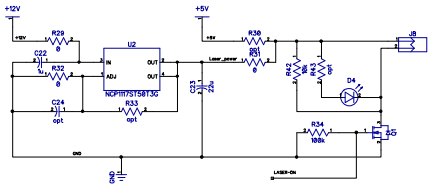

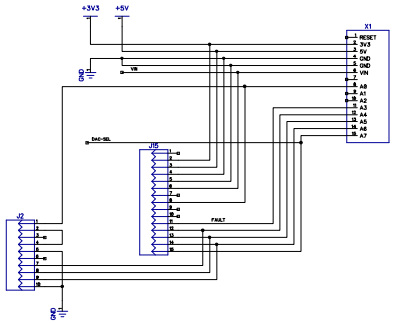

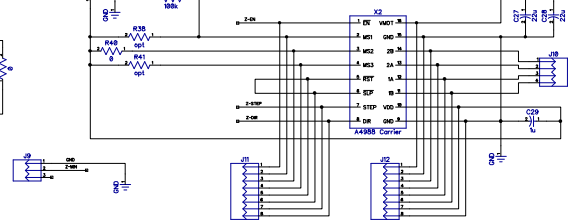

RefDes	Name	Value	Quantity
C1, C24	CAP_0603	opt	2
C2, C3, C4, C5, C12, C13, C18, C19, C23, C27, C28	CAP_1210	22u	11
C6	CAP_0603	4.7n	1
C7, C9, C10, C11, C14, C15, C22, C25, C26, C29	CAP_0805	1u	10
C8, C16, C17, C20, C21	CAP_0603	47p	5
D1, D2	B240-FDICT		2
D3	MM3Z18VST1G	18V Zener	1
D4	LED		1
J1	90131-0132		1
J2	1-644456-0		1
J3, J4	90131-0125		2
J5	22272031		1
J6, J7	03J0-BT		2
J8	B2B-XH-A		1
J9	644456-3		1
J10	644456-4		1
J11, J12	644456-8		2
J15	1-644456-5		1
Q1	2N7002		1
R1, R4, R10, R29, R31, R32, R39, R40	RES_0603	0	8
R2, R8, R14, R16, R30, R33, R38, R41, R43	RES_0603	opt	9
R3	RES_0603	182k	1
R5, R6, R11, R12, R17, R18, R19, R20, R21, R22, R23, R24, R25, R26, R27, R28, R34, R37	RES_0603	100k	18
R7	RES_0603	84.5k	1
R9, R13, R42	RES_0603	10k	3
R15, R35, R36	RES_0603	25	3
T1, T2	SRF1260	10u	2
U1	LT3579FE		1
U2	NCP1117ST50T3G		1
U3	LTC2602CMS8		1
U4	LM4040DIM3-4.1		1
U5	TL084D		1
X1	Arduino Mega Partial 2.5		1
X2	A4988 Carrier		1